CCD-M8E

SERVICE MANUAL

AEP Model
Australian Model
E Model
UK Model

September, 1985

Video 8

SPECIFICATIONS

System

Video recording system: Rotary two heads, Helical scanning FM system
Audio recording system: Rotary head, FM system
Video signal: PAL colour, CCIR standards
Usable cassettes: 8 mm video format cassette
Tape speed: SP: approx. 20.051 mm/sec. LP: approx. 10.058 mm/sec.
Recording time: SP: 1 hr. 30 min. (P5-90) LP: 3 hr. (P5-90)
Image device: CCD (Charge Coupled Device)
Viewfinder: OVF
Lens: f = 15 mm, F1.6 3 positions zone focus

Depth of field * m (feet)

mark	focus point	indoors	cloudy day	sunny day
	1.5 (4.9)	1.2 - 2.0 (3.9 - 6.6)	0.9 - 4.5 (3.0 - 14.8)	0.6 - ∞ (2.0 - ∞)
	2.4 (7.9)	1.7 - 4.2 (5.6 - 13.8)	1.2 - ∞ (3.9 - ∞)	0.8 - ∞ (2.6 - ∞)
	6.0 (19.7)	2.9 - ∞ (9.5 - ∞)	1.7 - ∞ (5.6 - ∞)	1.0 - ∞ (3.3 - ∞)

Colour temperature: ☆: 3200°K ☀: 5800°K
Minimum illumination: 25 lux (2.3 footcandles)
Illumination range: 25 - 100,000 lux (2.3 - 9,294 footcandles)
Recommended illumination: More than 300 lux (28 footcandles)
Microphone: Input −66 dBs, Electret condenser microphone

General

Power requirements: 6 V dc
Power consumption: 5.2 W
Operating temperature: 0°C to 40°C (32°F to 104°F)
Storage temperature: −20°C to +60°C (−4°F to +140°F)
Dimensions: Approx. 61 × 109 × 173 mm (2 1/2 × 4 3/8 × 6 7/8 in.) excluding the grip
Approx. 107 × 109 × 215 mm (4 1/4 × 4 3/8 × 8 1/2 in.) (w/h/d) including the grip
Weight: Approx. 1.0 kg (2 lbs 3 oz) excluding the battery and cassette
Approx. 1.37 kg (3 lbs) including the battery and cassette
Accessory supplied: Shoulder strap (1)

— Continued on next page —

8 VIDEO CAMERA RECORDER

SONY®

MICROFILM

VIDEO

While the information given is true at the time of printing, small production changes in the course of our company's policy of improvement through research and design might not necessarily be indicated in the specifications. We would ask you to check with your appointed Sony dealer if clarification on any point is required.

Note

This appliance conforms with EEC Directives 76/889 and 82/499 regarding interference suppression.

*When the FOCUS switch has been set to one of the three marks, an object within the range shown in the list will be in focus.

SAFETY CHECK-OUT

After correcting the original service problem, perform the following safety checks before releasing the set to the customer:

1. Check the area of your repair for unsoldered or poorly-soldered connections. Check the entire board surface for solder splashes and bridges.
2. Check the interboard wiring to ensure that no wires are "pinched" or contact high-wattage resistors.
3. Look for unauthorized replacement parts, particularly transistors, that were installed during a previous repair. Point them out to the customer and recommend their replacement.
4. Look for parts which, though functioning, show obvious signs of deterioration. Point them out to the customer and recommend their replacement.
5. Check the line cord for cracks and abrasion. Recommend the replacement of any such line cord to the customer.

SAFETY-RELATED COMPONENT WARNING !!

COMPONENTS IDENTIFIED BY SHADING AND MARK ⚠ ON THE SCHEMATIC DIAGRAMS, EXPLODED VIEWS AND IN THE PARTS LIST ARE CRITICAL TO SAFE OPERATION. REPLACE THESE COMPONENTS WITH SONY PARTS WHOSE PART NUMBERS APPEAR AS SHOWN IN THIS MANUAL OR IN SUPPLEMENTS PUBLISHED BY SONY. CIRCUIT ADJUSTMENTS THAT ARE CRITICAL TO SAFE OPERATION ARE IDENTIFIED IN THIS MANUAL. FOLLOW THESE PROCEDURES WHENEVER CRITICAL COMPONENTS ARE REPLACED OR IMPROPER OPERATION IS SUSPECTED.

TABLE OF CONTENTS

Section	Title	Page
1.	GENERAL	
1-1.	Location and Function of Parts and Controls	4
1-2.	Attaching the Grip	6
1-3.	Adjusting the Grip Strap	6
1-4.	Power Sources	7
1-5.	Cassette Care	9
1-6.	Camera Recording	10
1-7.	Indicators	11
1-8.	To View the Recorded Tape	12
1-9.	White Balance	12
1-10.	Notes on Moisture Condensation	13
1-11.	Using Your Recorder Abroad	13
1-12.	Brightness Levels	13
1-13.	Hins for Better Shooting	13
1-14.	Organization	13
1-15.	Scene Length	13
1-16.	Framing People	14
1-17.	Camera Position and Angle	14
2.	DISASSEMBLY	
2-1.	Removal of Cassette Compartment Cover and LS Cover	15
2-2.	Removal of Grip Cabinet	16
2-3.	Removal of Front Cabinet and Rear Cabinet	16
2-4.	Removal of Cabinet L	17
2-5.	Removal of DC-DC Converter	17
2-6.	Opening of VC-6 Board	18
2-7.	Opening of VC-4 Board and VC-5 Board	18
2-8.	Removal of FP-16 Board	19
2-9.	Opening of MD-10 Board	19
2-10.	Removal of Cassette Arm	20
2-11.	Removal of Frames A and B	20
2-12.	Removal of LS Cassette Compartment	21
2-13.	Removal of FH-4 Board	21
2-14.	Removal of Built-In Microphone	22
2-15.	Internal Views	23
3.	DIAGRAMS	
3-1.	Circuit Boards Location	25
3-2.	Overall Block Diagram	26
3-3.	Camera Block Diagram	29
3-4.	Video Block Diagram	33
3-5.	Servo Block Diagram	36
3-6.	System Control Block Diagram	39
3-7.	System Control Interface (IC101)	41
3-8.	Function Description of IC101 Pin (MD-10 Board)	41
3-9.	Audio Block Diagram	43
3-10.	Audio Level Diagram	45
3-11.	Power Block Diagram	46

Section	Title	Page
4.	SCHEMATIC DIAGRAMS AND PRINTED WIRING BOARDS	
4-1.	Frame Schematic Diagram	49
4-2.	Schematic Diagrams and Printed Wiring Board	53
	• VC-4, 5, 6 Board	54
	• MD-10 Board	64
	• MD-10, CC-3, ES-11, FH-4, FP-8, FP-14, FP-16	72
	• DT-60 Board	82
	• SH-1 Board	87
	• MX-2 Board	92
	• IA-1 Board	97
	• ED-11 Board	101
	• RP-29 Board	105
	• YM-2 Board	109
	• AU-16 Board	113
	• SV-16 Board	117
4-3.	Semiconductors	121
5.	EXPLODED VIEWS	
5-1.	Cabinet Assembly	123
5-2.	Grip Assembly	125
5-3.	Cassette Arm and Frame A • B Assembly	126
5-4.	LS Cassette Compartment Assembly	127
5-5.	Chassis Assembly (1)	128
5-6.	Chassis Assembly (2)	129
5-7.	Camera and Board Assembly	130
5-8.	Hardware List	131
6.	ELECTRICAL PARTS LIST	132
	ADJUSTMENT	
	SUPPLEMENT-3	

SECTION 1
GENERAL

1-1. LOCATION AND FUNCTION OF PARTS AND CONTROLS

A-1

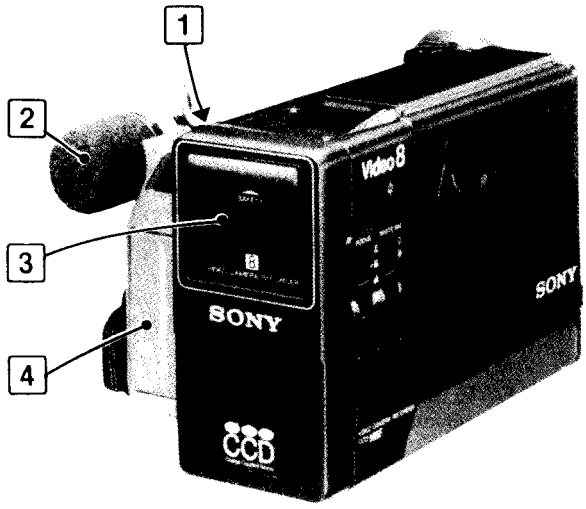

A-1

For further details, refer to the page numbers next to each item.

1 **Microphone connector** ⑥

2 **Microphone** ⑩
For recording, pull ahead.

3 **Lens cover** ⑩
When the unit is not in use, slide this cover over the lens. To turn off the power, slide this cover over the lens.

4 **Battery compartment** ⑦
Insert an NP-22 battery pack, ACP-85/88 series ac pack or DCP-85 dc pack.

A-2

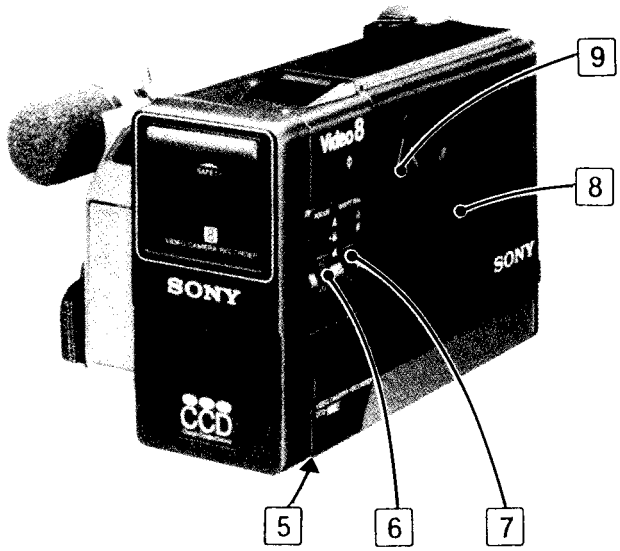

A-2

5 **Tripod receptacle**

6 **FOCUS switch** ⑩
Normally set to ▪.

7 **WHITE BAL switch** ⑩
☼: Artificial light (indoors)
☀: Sunlight (outdoors)

8 **Cassette holder** ⑨

9 **Tape running direction**

A-3

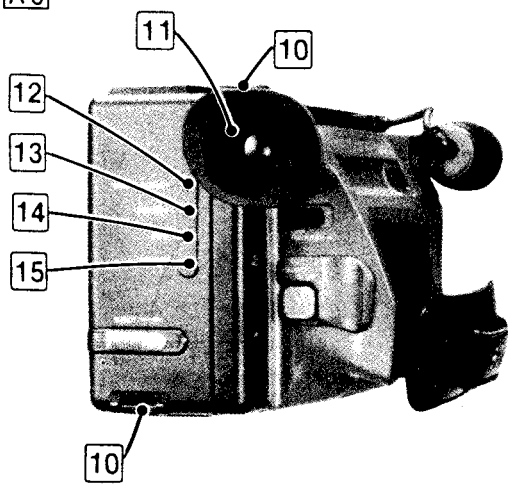

A-4

A-3

[10] **Shoulder strap roop**

[11] **Optical viewfinder ⓫**
The lamps inside indicate all the information necessary for operation.

> The eyecup in the photo is attached for the right eye.
> For the left eye, detach the rubber eyecup and attach it as illustrated. A-4

[12] **TAPE RUN/BATT lamp ⓬**

[13] **STANDBY lamp ⓬**

[14] **DEW lamp ⓬**

[15] **CAUTION lamp ⓬**

A-5

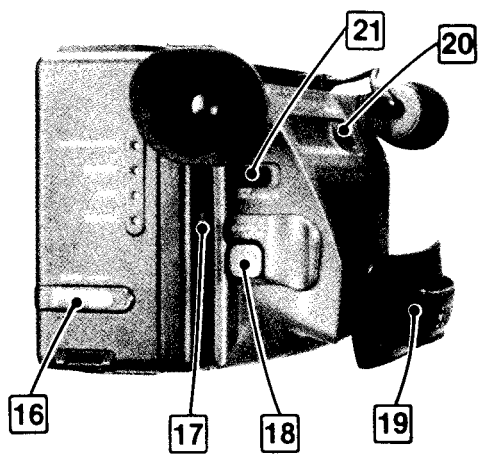

A-5

[16] **EJECT switch ⓽**
Slide this switch in the direction of the arrow. The top of the holder rises and the cassette holder opens. During recording, this switch does not function.

[17] **REC MODE selector ⓾**
This selects the recording speed, SP or LP.

[18] **REC START/STOP button ⓾**

[19] **Grip strap ❼**
Adjust this so that your fingertips can easily manipulate the REC START/STOP button.

[20] **BATT EJECT button ❽**

[21] **GRIP RELEASE button ❻**
Press to the right to slide the grip off.

B-1

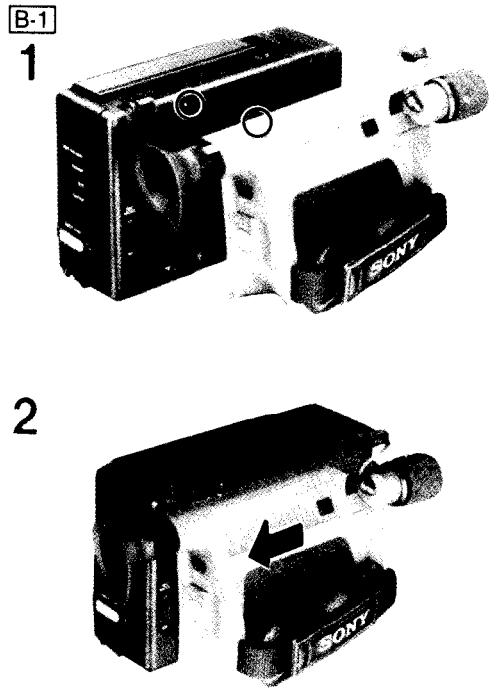

1-2. ATTACHING THE GRIP B-1

1 Align the ▼ marks.
2 Pull the grip until it locks.
3 Connect the microphone connector with the ⌓ mark upwards.

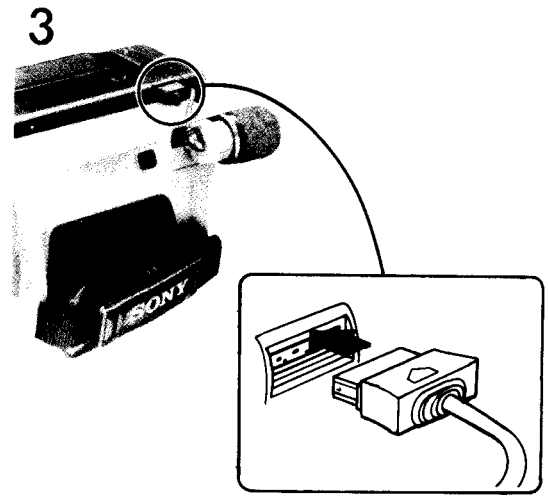

To detach the grip B-2

1 Disconnect the microphone connector.
2 While pressing the GRIP RELEASE button to the right, slide the grip off.

B-2

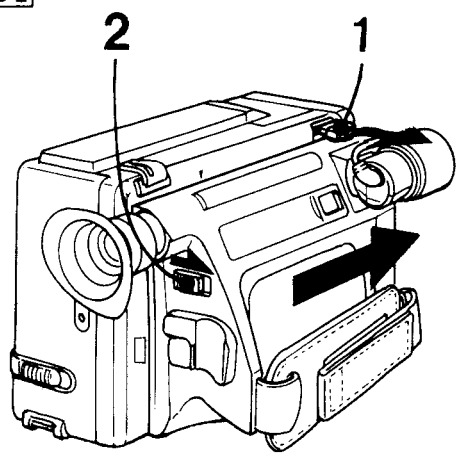

C

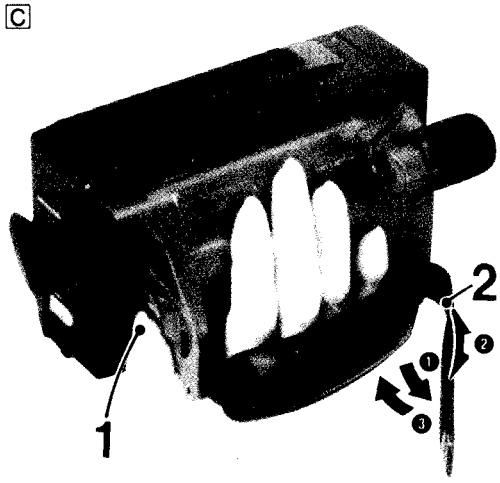

1-3. ADJUSTING THE GRIP STRAP C

1 Position your right hand so that your fingertip can easily manipulate the REC START/STOP button.
2 Adjust the length of the strap (❶, ❷, ❸).

1-4. POWER SOURCES

Place	Accessory to be used	Connection
Outdoors	Battery pack NP-22	page 7
Indoors (house current)	AC pack ACP-85E/85 UB/85AS or (for the models outside Europe) ACP-88	page 8
In the car	DC pack DCP-85 and car battery cord DCC-16AE	page 8

D-1

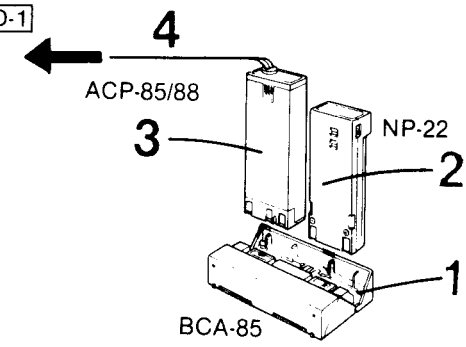

D-2

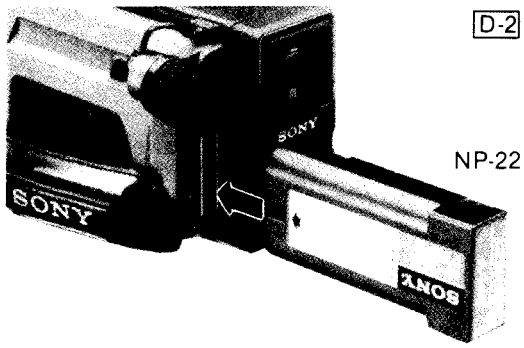

BATTERY PACK

How to charge

Use the ACP-85/88 series ac pack and the BCA-85 battery charge adaptor to charge the battery.

> The ACP-85E is for use in 220 V ac areas and the ACP-85UB/85AS for 240 V ac areas. The ACP-88 ac pack, for the models outside Europe, can be used in all areas where the local power voltage is within 100-240 V. Depending on the shape of your wall outlet, a plug adaptor may be necessary to plug the mains lead of the ac pack into the mains outlet.

Rapid charging D-1

The charging time is about 1.5 hours for one battery only.

Open the side with △ OPEN mark of the BCA-85 battery charge adaptor.

Insert the battery with the metal contacts facing the inside.

3 Insert the ac pack into the battery charge adaptor with the metal contacts facing the inside.

4 Connect the mains lead of the ac pack to the mains outlet.

Normal charging

It takes about 8 hours to charge up to 3 batteries simultaneously. Slide the RELEASE switch of the BCA-85 in the direction of the arrow to open the other side and insert 1 to 3 batteries.

When the batteries are fully charged, the charging will stop automatically and the CHARGE lamp of the battery charge adaptor will go out.

Battery life

At normal temperatures, a fully-charged battery provides 80 minutes of continuous operation.

Notes

- As this unit consumes power even in the standby mode, the actual recording time will be shortened.
- If the battery pack is not fully charged or if it is used in a cold place, the operating time is shortened.

To insert the battery pack D-2

Insert the NP-22 battery into the battery compartment with the metal contacts facing the inside.

D-3

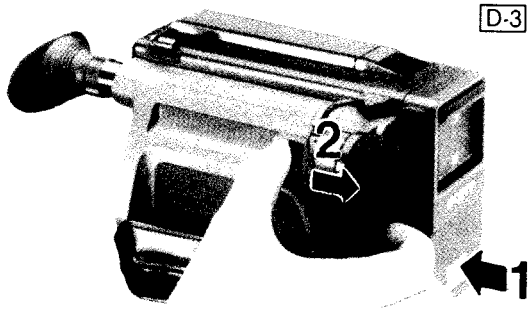

To remove the battery pack D-3

Push the bottom of the battery pack and hold it.

At the same time slide the BATT EJECT button in the direction of the arrow and slide the battery pack out.

AC PACK

D-4

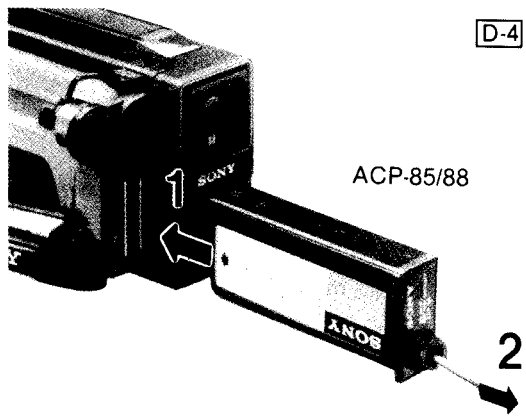

ACP-85/88

Connection D-4

1 Insert the ACP-85/88 series ac pack into the battery compartment with the metal contacts facing the inside.
2 Connect the mains lead of the ac pack to the mains outlet.

To remove the ac pack, push the ac pack in and at the same time slide the BATT EJECT button in the direction of the arrow.

D-5

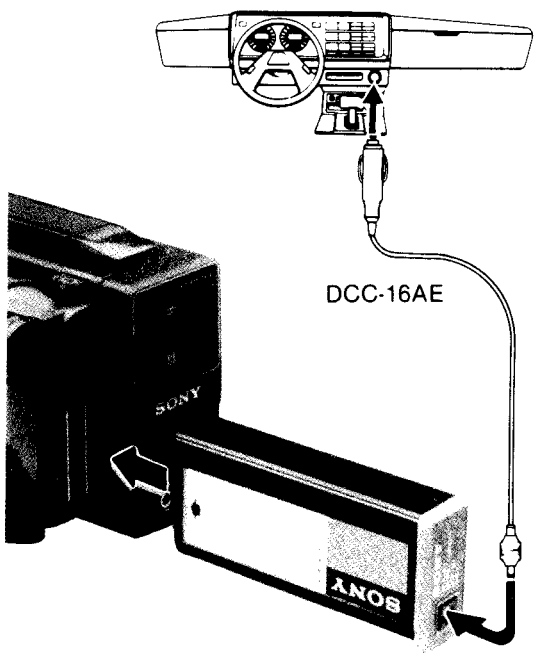

DCC-16AE

DC IN

CAR BATTERY D-5

Connect the DCC-16AE car battery cord to the DC IN jack of the DCP-85 dc pack and to the cigarette lighter (12 V or 24 V) socket of a car and insert the dc pack into the video camera recorder.

To remove the dc pack, push the dc pack in and at the same time slide the BATT EJECT button in the direction of the arrow.

Note on power source

If the battery/ac pack is removed or the mains lead of the ac pack is disconnected during recording or in the standby mode, the tape may be damaged, unless power is supplied again soon.

E-1

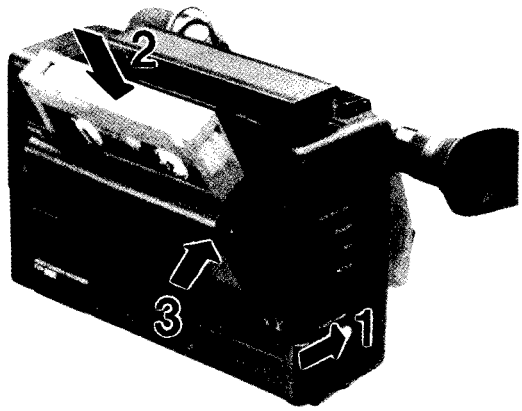

E-2

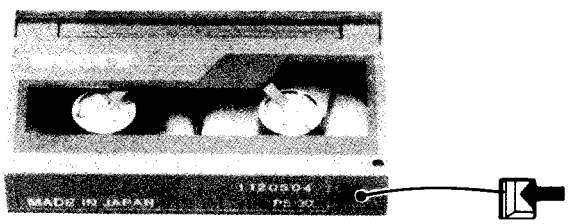

Note

- Never insert anything in the small holes on the rear of the cassette. These holes are used to sense the kind of tape, thickness of tape, if the tab is out or in, etc.
- While the top of the cassette holder is rising, never pull or push it forcibly.
- To view the picture which has been recorded on this unit, set a monitor switch of the video cassette recorder for playback to the STD (standard) position.

1-5. CASSETTE CARE

CASSETTE INSERTION E-1

First insert the battery or ac pack into the battery compartment and connect the mains lead of the ac pack to the ac outlet.
Always insert a cassette in the correct direction. Never insert it upside down.

1 Open the cassette holder by sliding the EJECT switch in the direction of the arrow.
2 Insert the cassette.
3 Close the cassette holder by pressing the PUSH mark on the holder.

To remove the cassette, open the cassette holder by sliding the EJECT switch in the direction of the arrow.

THE TAB ON THE CASSETTE E-2

(The photo is Sony cassette.)

When a new recording is made on a previously recorded cassette, the previous recording will be automatically erased. To avoid erasing a recording, slide the tab out to cover the opening.
To re-record on a cassette, slide the tab in.

When the cassette with the tab set out is inserted and the REC START/STOP button is pressed, this unit does not function.

TO RECORD FROM THE BEGINNING OF THE TAPE

Run the video camera recorder for about 15 seconds at the beginning of a cassette before recording to avoid missing the starting point during playback on a video cassette recorder.

1-6. CAMERA RECORDING

1 Holding the microphone base, push the microphone out.

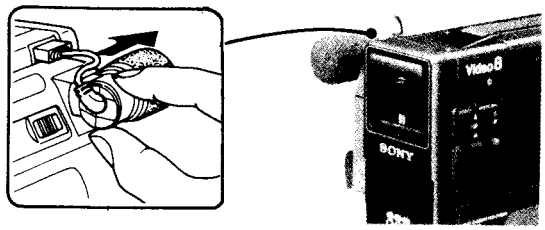

2 Insert the battery.

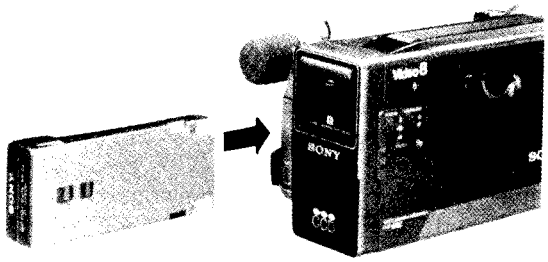

3 Insert the cassette.

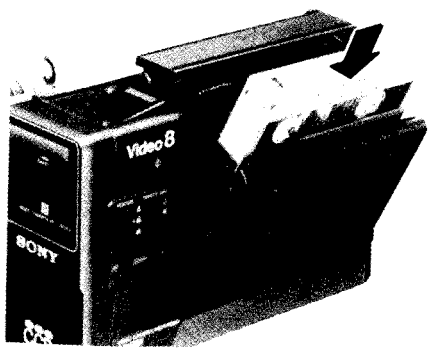

4 Open the lens cover completely.

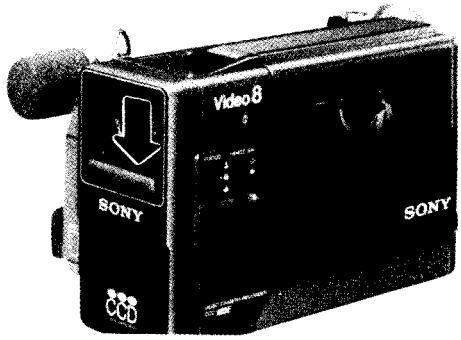

5 Adjust the white balance.
☼: Artificial light (indoors)
☀: Sunlight (outdoors)
For details, see page 12.

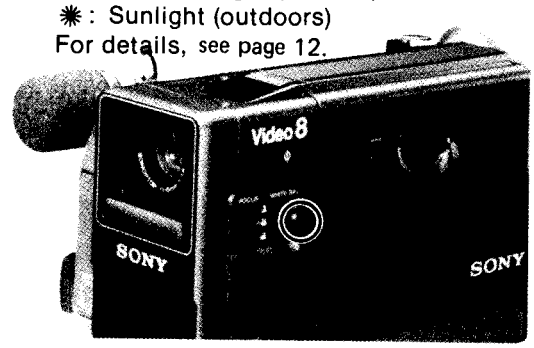

6 Adjust the focus.
Normally set to ▪▲. For details, see "On the position of the FOCUS switch" on page 11.

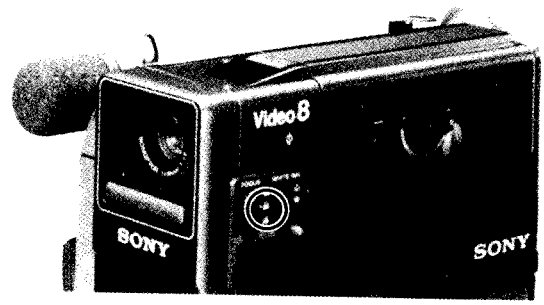

7 Set the REC MODE switch to the proper position according to the length of the programme to be recorded.

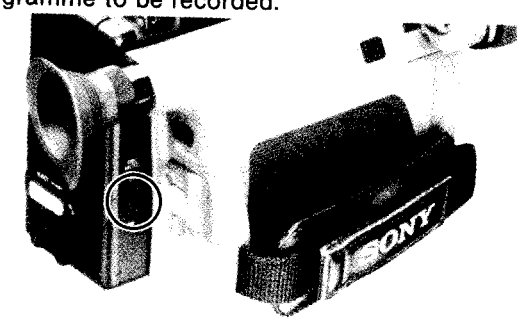

8 Press the REC START/STOP button all the way in. After only the red lamp lights up, recording starts.

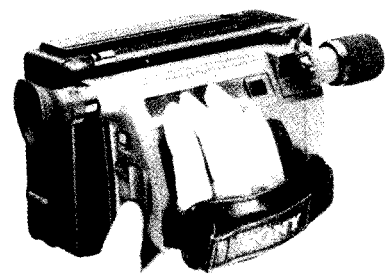

To stop recording, press the REC START/STOP button deeply. The unit is in the standby mode.

- To resume the recording, press the REC START/STOP button again.
- **To produce a consecutive recording on a cassette, do not remove the cassette between recordings.**

When the unit is not in use, slide the lens cover over the lens (the battery is saved) and replace the microphone.

To start recording immediately

Lightly press the REC START/STOP button. When the standby lamp (orange) blinks and then lights up, the recorder is in the standby mode. When the REC START/STOP button is pressed all the way in again in the standby mode, the recording will start immediately.

If the standby mode continues for more than approximately 3 minutes, the standby mode will be automatically released and the power will be turned off.

On the position of the FOCUS switch

When you would like to record indoors using a dim light, set the FOCUS switch according to the following distances.

: Approx. 1.2-2.0 m (3.9-6.6 feet)
: Approx. 1.7-4.2 m (5.6-13.8 feet)
: More than 2.9 m (9.5 feet)

Notes

- Never hold the microphone by the black windscreen.
- Avoid shaking the unit in the standby mode.
- Never record an extremely bright object such as the sun just after recording under dark conditions; otherwise normal recording may become impossible. In this situation, point the recorder at any object except a very bright one.
- A vertical band may appear when a subject such as a candle flame or a light is shot against a dark background.
- A lens filter or a conversion lens can't be attached to this unit.
- **When recording has stopped and the unit is in the standby mode, the function buttons will not work for about 3 seconds.**

F-1

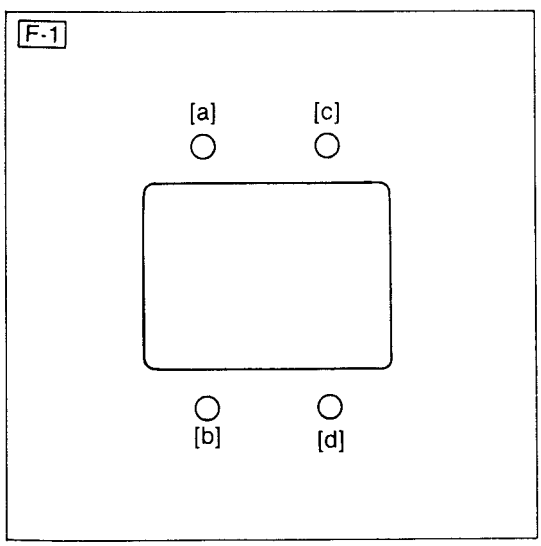

1-7. INDICATORS

LAMPS INSIDE THE VIEWFINDER F-1

[a] Indoor lamp (yellow)
Lights up when the WHITE BAL switch is set to .

[b] Tape run/battery lamp (red)
Blinks when the inserted battery is exhausted.
Lights up during recording.

[c] Standby lamp (orange)
Blinks before the recorder is set in the standby mode.
Lights up when the recorder is set in the standby mode.

[d] Low light lamp (yellow)
Lights up when the light is insufficient.

[b] and [c]
Blinks alternately when moisture has condensed inside the unit. (See page 13)
Blinks when the video heads have been contaminated.

F-2

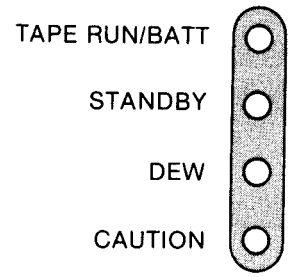

LAMPS OUTSIDE THE RECORDER F-2

TAPE RUN/BATT lamp (red)
- Blinks when the battery is exhausted.
- Lights up during recording.
- When moisture has condensed during recording, this and STANDBY lamps blink alternately.

STANDBY lamp (orange)
- Blinks before the recorder is set in the standby mode.
- Lights up when the recorder is set in the standby mode.
- When the video heads have been contaminated during recording, this and TAPE RUN/BATT lamps blink alternately.

DEW lamp (yellow)
- Lights up when moisture has condensed inside the unit. (See page 13)

CAUTION lamp (red)
- Lights up when the video heads have been contaminated.

G

1

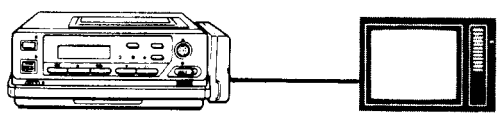

EV-C8E RFU-85/85AS

2

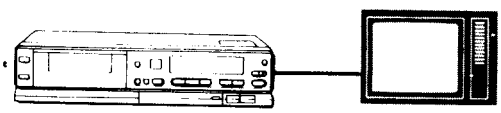

EV-A300/S700

1-8. TO VIEW THE RECORDED TAPE G

Example 1: Playback on a Sony EV-C8E video cassette recorder
Example 2: Playback on a Sony EV-A300/S700 series video cassette recorder

1-9. WHITE BALANCE

The white balance must be adjusted so that a white subject can be recorded white no matter what the colour of the light source. Normally set the WHITE BAL switch as suggested on page 10 except

H-1 for night lights or fireworks
..... Set to ✲.

H-2 for recording indoors, but with sunlight as the dominant light source
..... Set to ✹.

If light conditions change, the white balance may have to be readjusted.

Note
According to the light source, the white subject may not be recorded white.

H-1 H-2

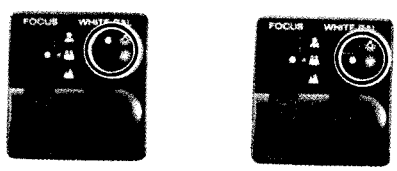

1-10. NOTES ON MOISTURE CONDENSATION

INSIDE THE RECORDER SECTION

If the unit is brought directly from a cold to a warm location, moisture may condense on the drum assembly inside the unit. In this condition, the tape may adhere to the head drum. To prevent damage under these circumstances, the recorder section is furnished with a moisture sensor.

If moisture is present, the TAPE RUN/BATT lamp (red) and STANDBY lamp (orange) blink alternately and the DEW lamp (yellow) lights up.
Remove the cassette and let the unit stand with the cassette compartment open for about an hour.

The moisture has evaporated if the cassette holder can be closed.

When the moisture has condensed, the buttons except the EJECT will not function and the recording will stop.

ON THE LENS

Moisture may condense also on the lens when the unit is brought in from a cold place to an extremely warm place, causing the lens to become dim. If this occurs, slide the lens cover over the lens and leave the unit unused at least for an hour.

1-11. USING YOUR RECORDER ABROAD

Each country has a TV colour broadcast and electricity standard. Before using your recorder abroad, check the following points.

For camera recording
Prepare fully charged batteries and extra video cassette tapes.

For monitoring the playback picture
Use an 8 mm video cassette recorder and TV based on the PAL system. If you use an EV-C8E video cassette recorder, a TV based on the PAL system which is equipped with audio/video inputs must be used.

PAL system countries
Australia, Austria, Belgium, China, Denmark, Great Britain, Holland, Hong Kong, Italy, Kuwait, New Zealand, Norway, Portugal, Singapore, Spain, Sweden, Switzerland, Thailand, West Germany, etc.

1-12. BRIGHTNESS LEVELS

The single greatest influence on picture quality is the brightness level. Using the following chart as a reference, take a few minutes to familiarize yourself with brightness levels to improve your recording.

	Unit: lux	
Normal recording		Snow-covered mountains Snow fields Sandy beach, clear day in summer
	100,000	Clear day, mid-day (100,000) Clear day, mid-afternoon (35,000) Overcast day, mid-day (32,000)
	10,000	Overcast day, one hour after sunrise (2,000) Office lit by fluorescent lamps, near window (1,000)
	1,000	Clear day, one hour before sunset (1,000) Department store counter (500~700)
	500	Station wicket (650)
Video light recommended		Office lit by fluorescent lamps (400~500) Room lit by two 30 W fluorescent lamps (300) Subway station platform (300)
	100	Arcade at night (150~200)
Video light required		Theater lobby (15~35) Candle light (10~15)
	10	

1-13. HINTS FOR BETTER SHOOTING

- Shoot with the sun at your back (front-lighting).
- For stable shooting, hold the upper arm firmly against the body.
- Make each scene 6-7 seconds in length for easier viewing. (See page 13)
- Mainly, use medium and close-up shots. (See page 14)
- Light the subject sufficiently. (See page 13)
- Vary the angle. (See page 14)

1-14. ORGANIZATION
—is the key

Before shooting, think about how one scene will lead into another scene. This will help you to create a programme that has a sense of progression.

1-15. SCENE LENGTH
—not too long, not too short

While there's no hard-and-fast rule, it is generally advisable to make each scene 6-7 seconds in length for easier viewing. A succession of short scenes can tire the viewer, while a very long scene can become boring.

2-2. REMOVAL OF GRIP CABINET

1) Remove connector ❶ from the main body ❷.
2) Slide G lock release knob ❸ in the direction of arrow Ⓐ, and remove grip cabinet ❹ in the direction of arrow Ⓑ.

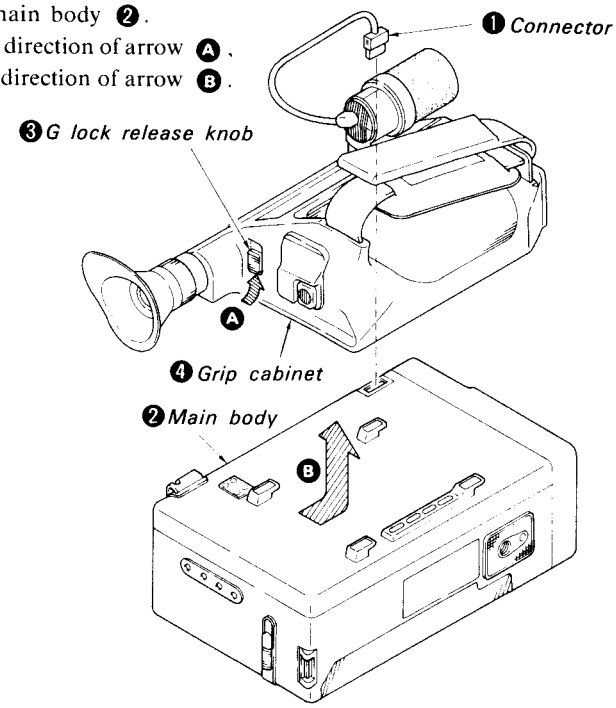

2-3. REMOVAL OF FRONT CABINET AND REAR CABINET

1) Remove 3 screws ❶.
2) Remove front cabinet ❷ in the direction of arrow Ⓐ.
   * When installing, close the slide door ❸, put the F knob ❺ to the center position and set so that pin ❹ of F return arm is fitted into the slot ❻ of F locking plate.
3) Remove ❽ screws ❼.
4) Remove rear of cabinet 8 in the direction of arrow Ⓑ.
   * When installing, set so that pin ❾ of F ring fits into the concave section ❿ of F locking plate.

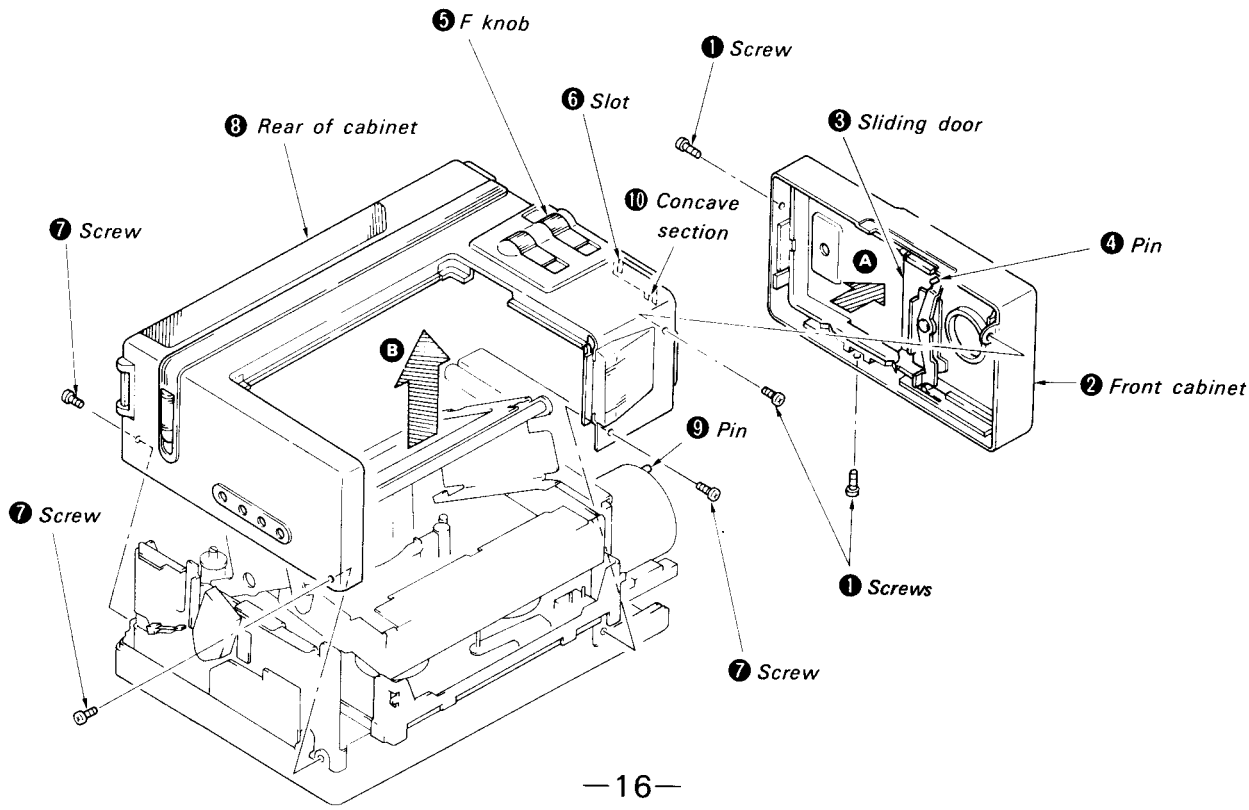

2-4. REMOVAL OF CABINET L

1) Remove 1 screw ⓫ .
2) Remove 2 screws ⓬ .
3) Remove cabinet L ⓭ in the direction of arrow Ⓒ .
   * Caution should be exercised so that FP-10 board ⓮ is not entangled with the inner side of cabinet L ⓭ .
   * When installing, attach screw ⓫ first and then screw ⓬ .

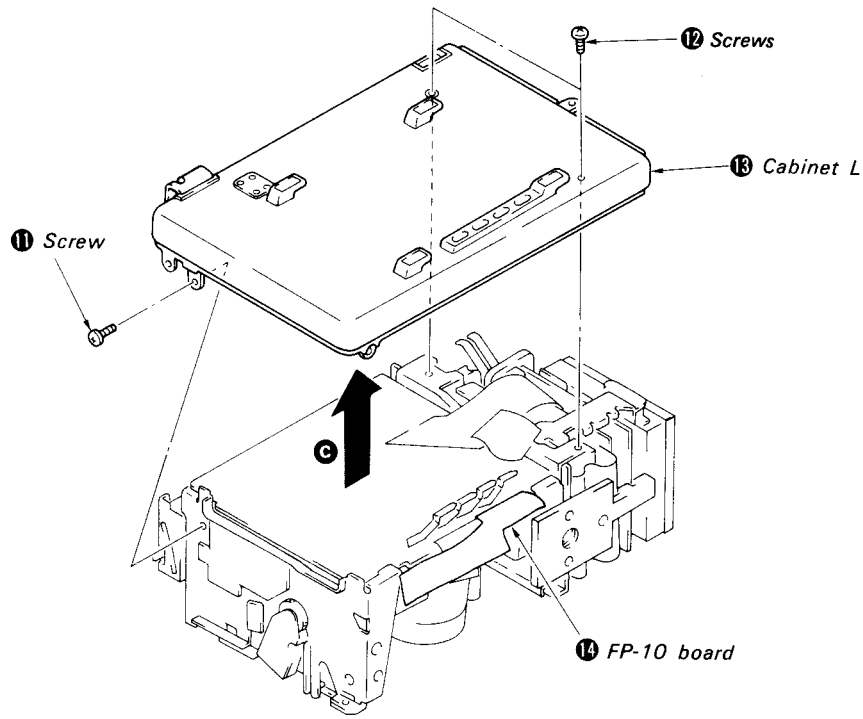

2-5. REMOVAL OF DC-DC CONVERTER

1) Remove 2 screws ❶ and 1 screw ❷ .
2) Remove the DC-DC converter ❸ .

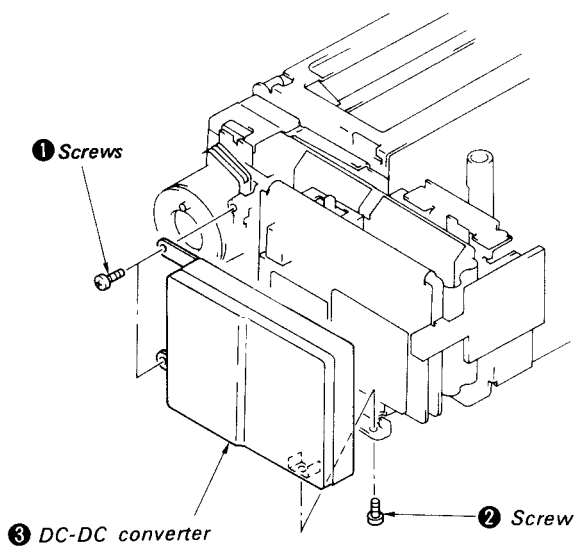

2-6. OPENING OF VC-6 BOARD

1) Remove 1 screw ❶.
2) Remove tripod plate ❷.
3) Bend claws ❸ at 2 positions in the direction of arrow Ⓐ, and remove from VC-6 board ❹.
4) Open VC-6 board ❹ in the direction of arrow Ⓑ.

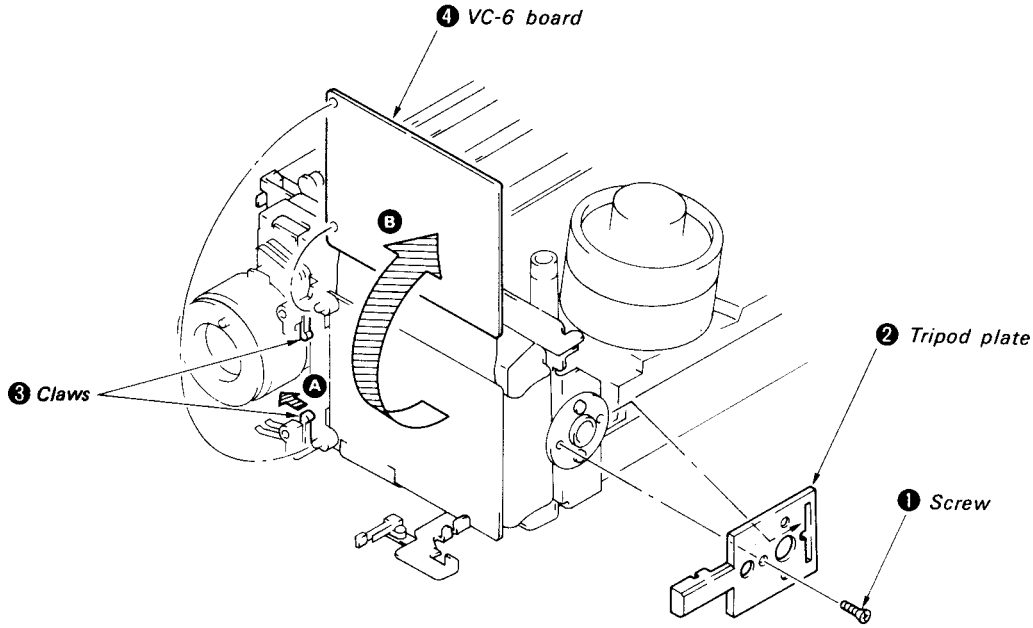

2-7. OPENING OF VC-4 BOARD AND VC-5 BOARD

1) Remove 1 screw ❶, 1 screw ❷, and 1 screw ❸.
2) Open VC-4 board ❹ in the direction of arrow Ⓐ.
3) Slide VC-5 board ❺ in the direction of arrow Ⓑ, and remove from C board holder ❻.
4) Remove VC-5 board ❺ from claw ❼, and open in the direction of arrow Ⓒ.

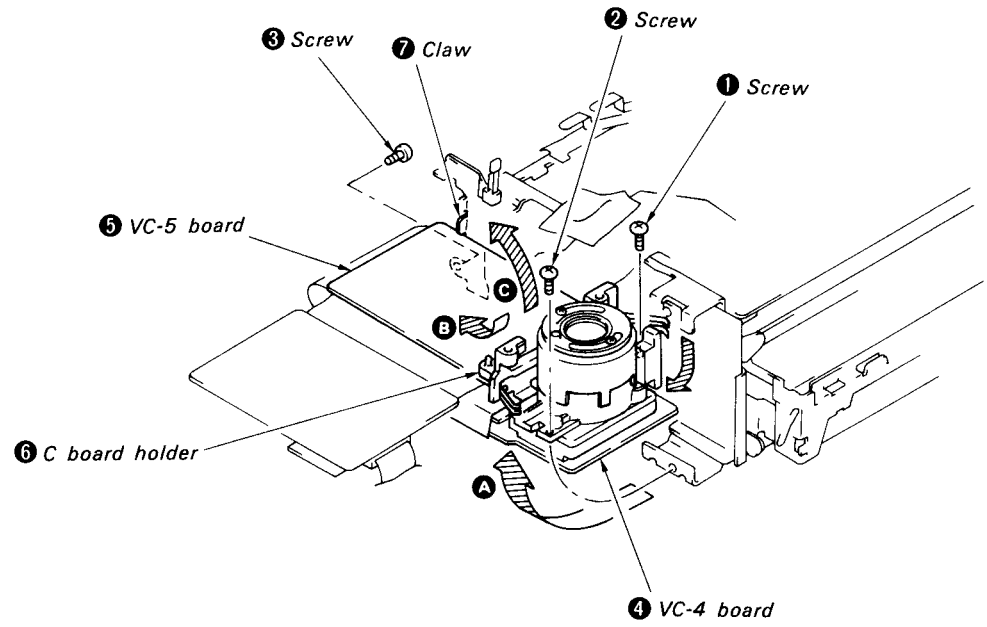

2-8. REMOVAL OF FP-16 BOARD

1) Remove 1 screw ❶.
2) Remove FP-16 board ❷ in the direction of arrow.

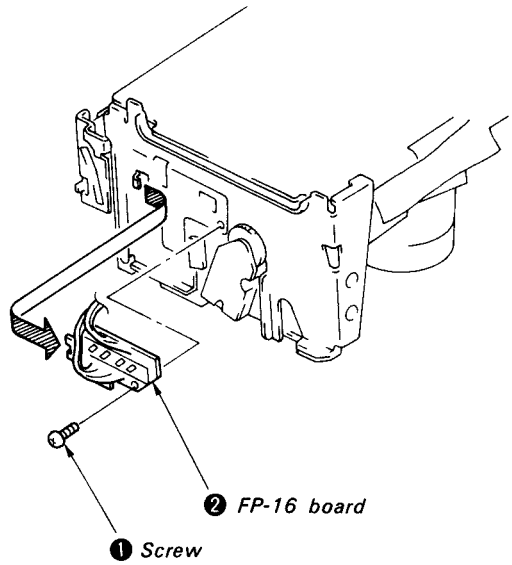

2-9. OPENING OF MD-10 BOARD

1) Remove 2 screws ❶ and 2 fiber washers ❷.
2) Open MD-10 board ❸ in the direction of arrow.
   * Caution should be exercised when installing MD-10 board so that the wiring from the board does not come into contact with the capstan motor.

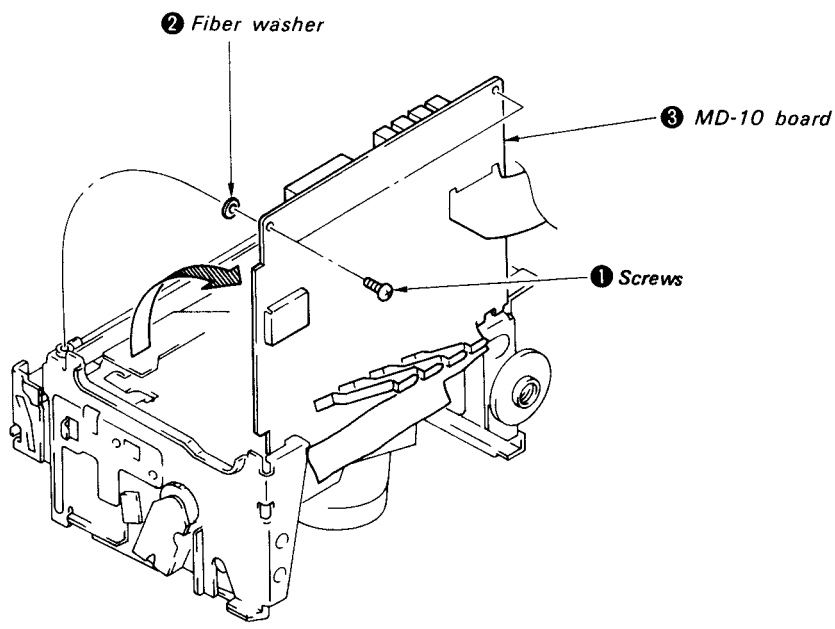

2-10. REMOVAL OF CASSETTE ARM

1) Remove 4 screws ❶.
2) Remove cassette arm ❷ in the upper direction.
   * When installing the cassette arm ❷, be sure that pin ❸ is inserted into the predetermined position.

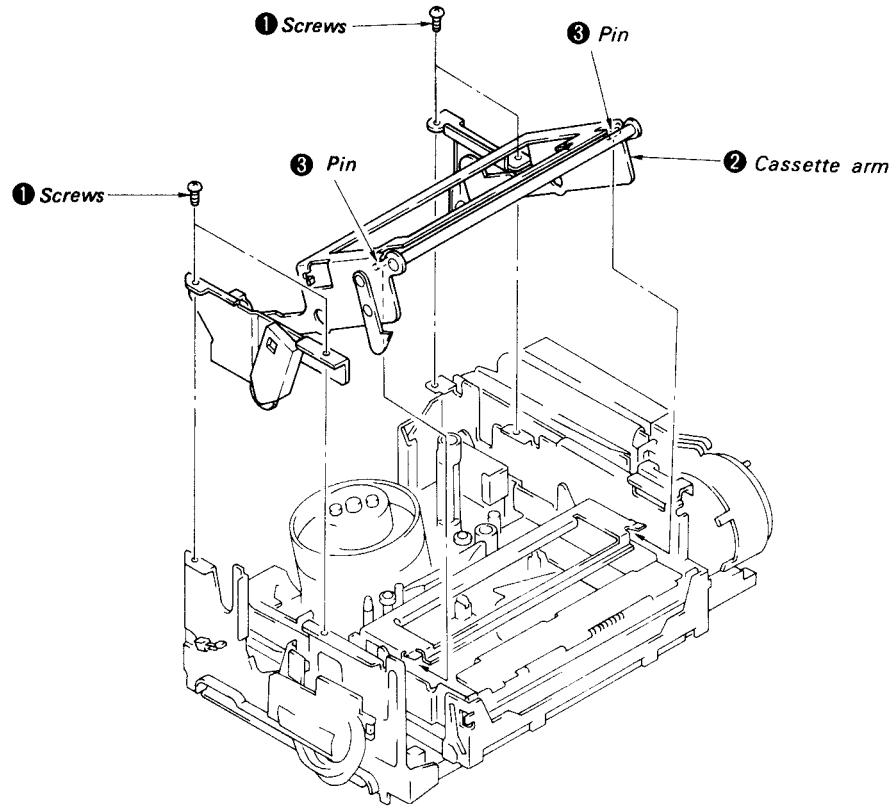

2-11. REMOVAL OF FRAMES A AND B

1) Remove 4 screws ❶.
2) Remove frame A ❷ in the direction of arrow Ⓐ.
3) Remove ES-11 board ❸ from frame B ❺.
4) Remove 4 screws ❹.
5) Remove frame B ❺ in the direction of arrow Ⓑ.

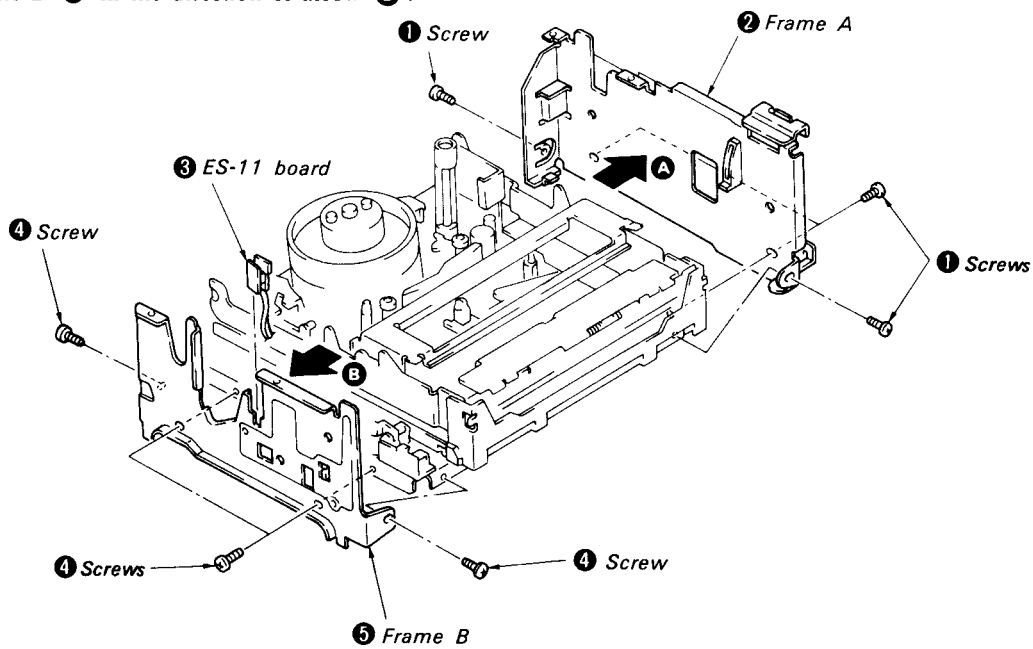

2-12. REMOVAL OF LS CASSETTE COMPARTMENT

1) Remove 4 screws ❶.
2) Bend 2 positions of the slot section ❹ of LS chassis ❸ in the direction of arrow Ⓐ, and then remove 2 positions of pin ❷.
3) Remove LS cassette compartment ❺ in the direction of arrow Ⓑ.

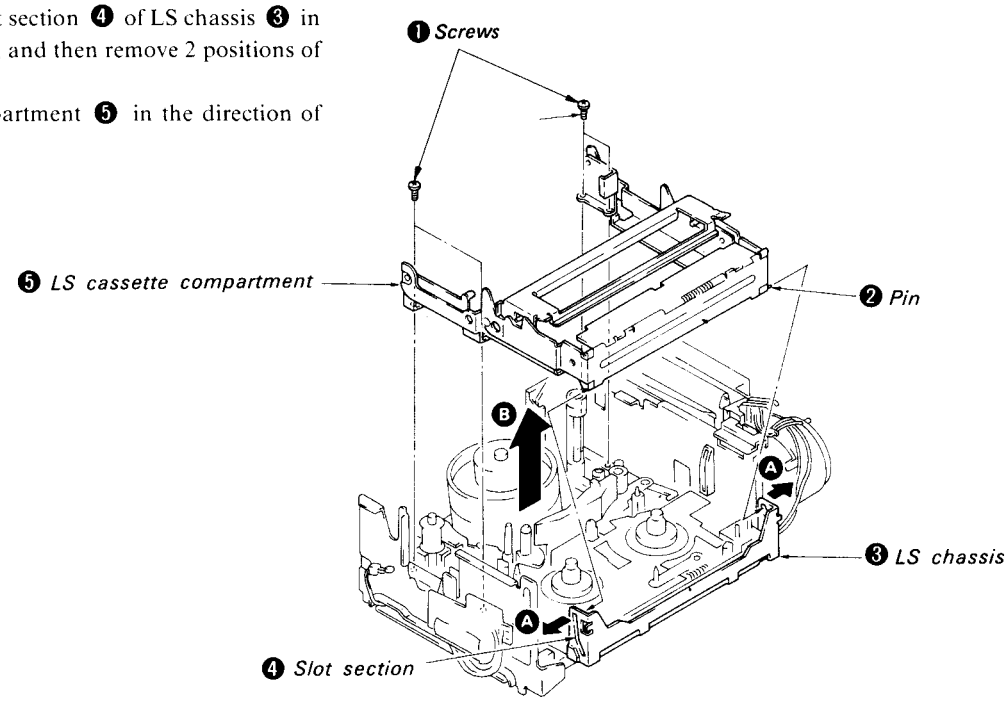

2-13. REMOVAL OF FH-4 BOARD

1) Remove eye cup ❶ in the direction of arrow Ⓐ.
2) Remove 4 screws ❷.
3) While removing G lock lever ❸ in the direction of arrow Ⓑ, remove grip cabinet ❹ in the direction of arrow Ⓒ.
4) Remove 2 screws ❺.
5) Remove FH-4 board ❻ in the direction of arrow Ⓓ.
   * When installing the grip cabinet ❹, set the conversion lever ❼ so that it comes to the predetermined position.

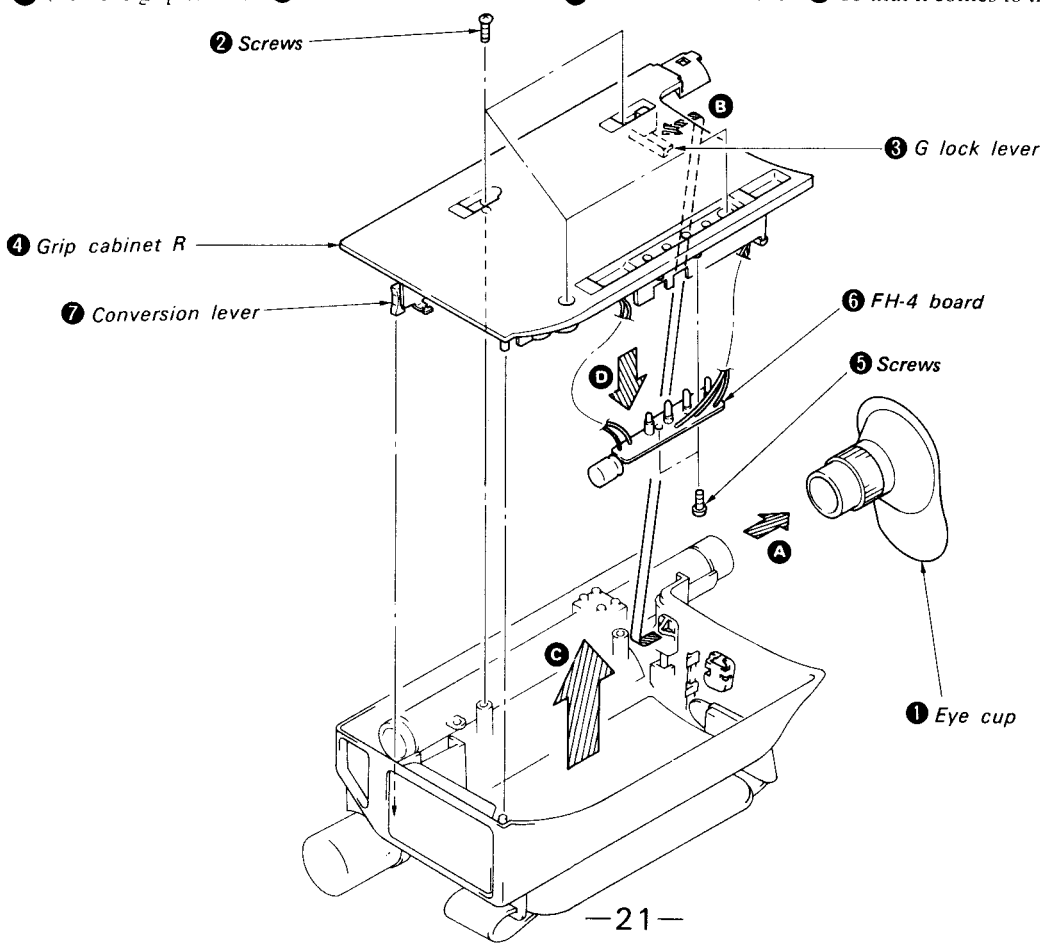

2-14. REMOVAL OF BUILT-IN MICROPHONE

1) Remove 1 screw ❶.
2) Remove OVF ❷ in the direction of arrow Ⓐ.
3) Remove 2 screws ❸, and remove the built-in microphone ❹ in the direction of arrow Ⓑ.

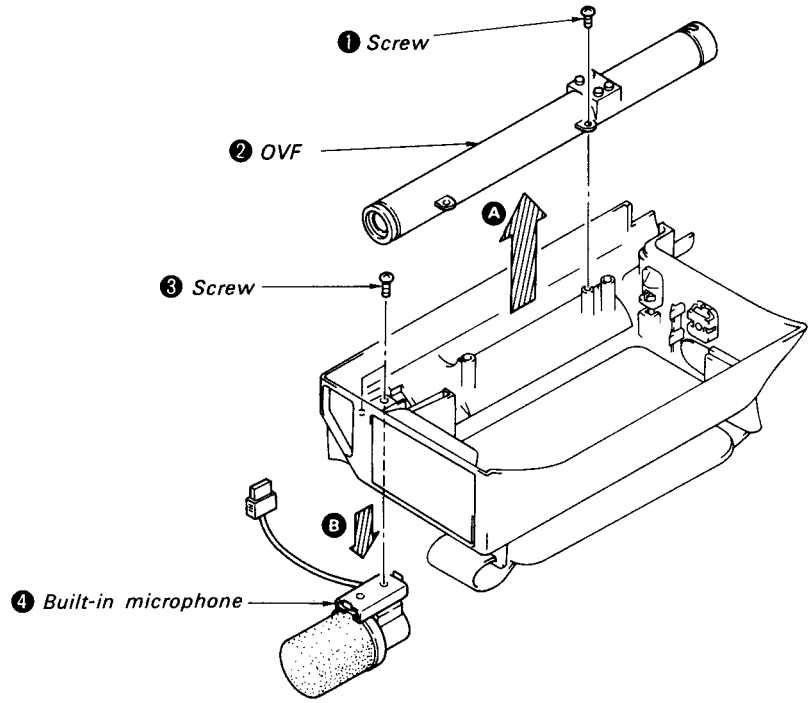

2-15. INTERNAL VIEWS

— Upper side —

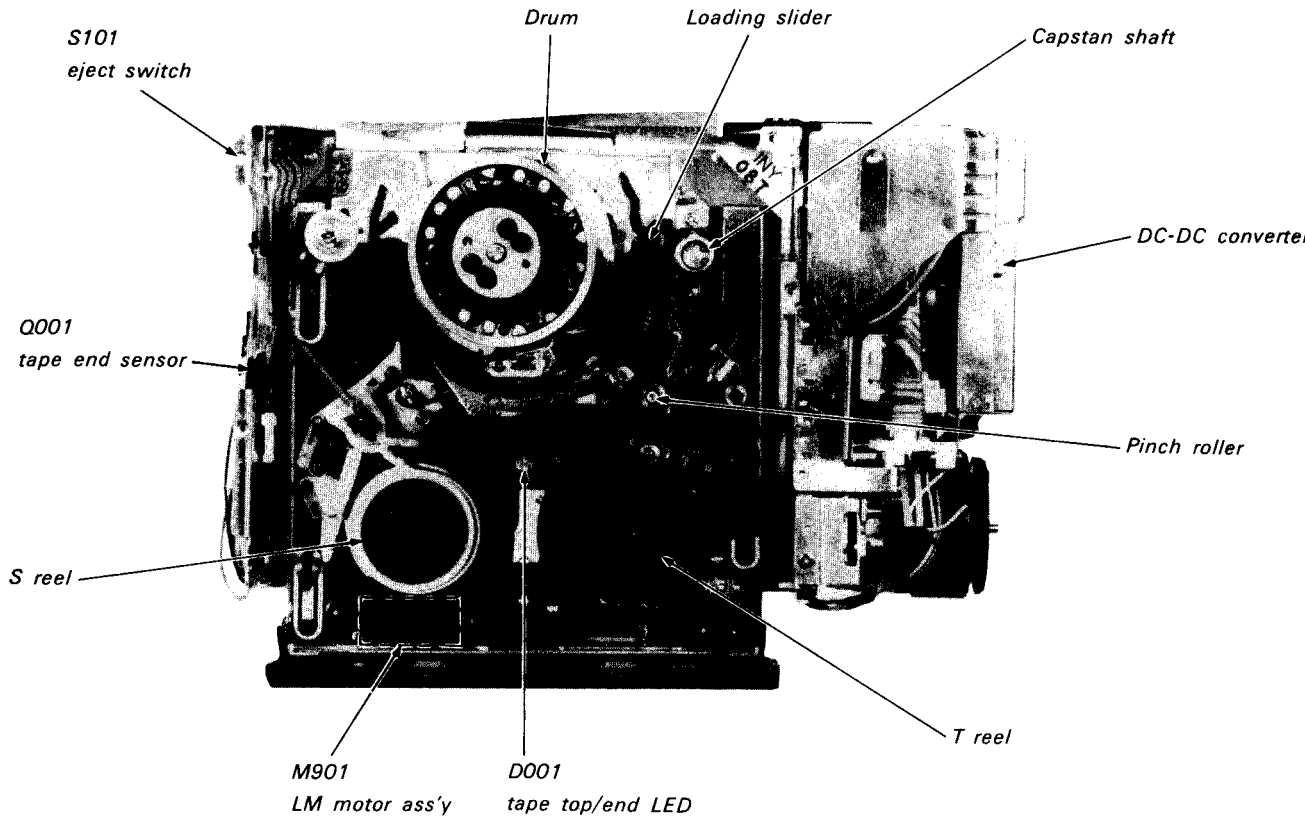

— Bottm side —

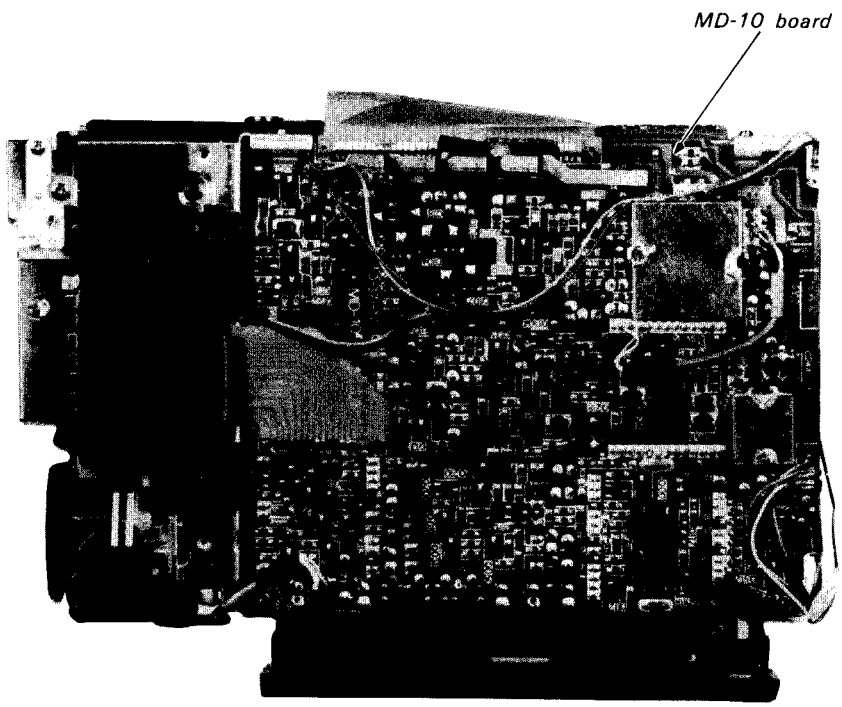

— Component side —

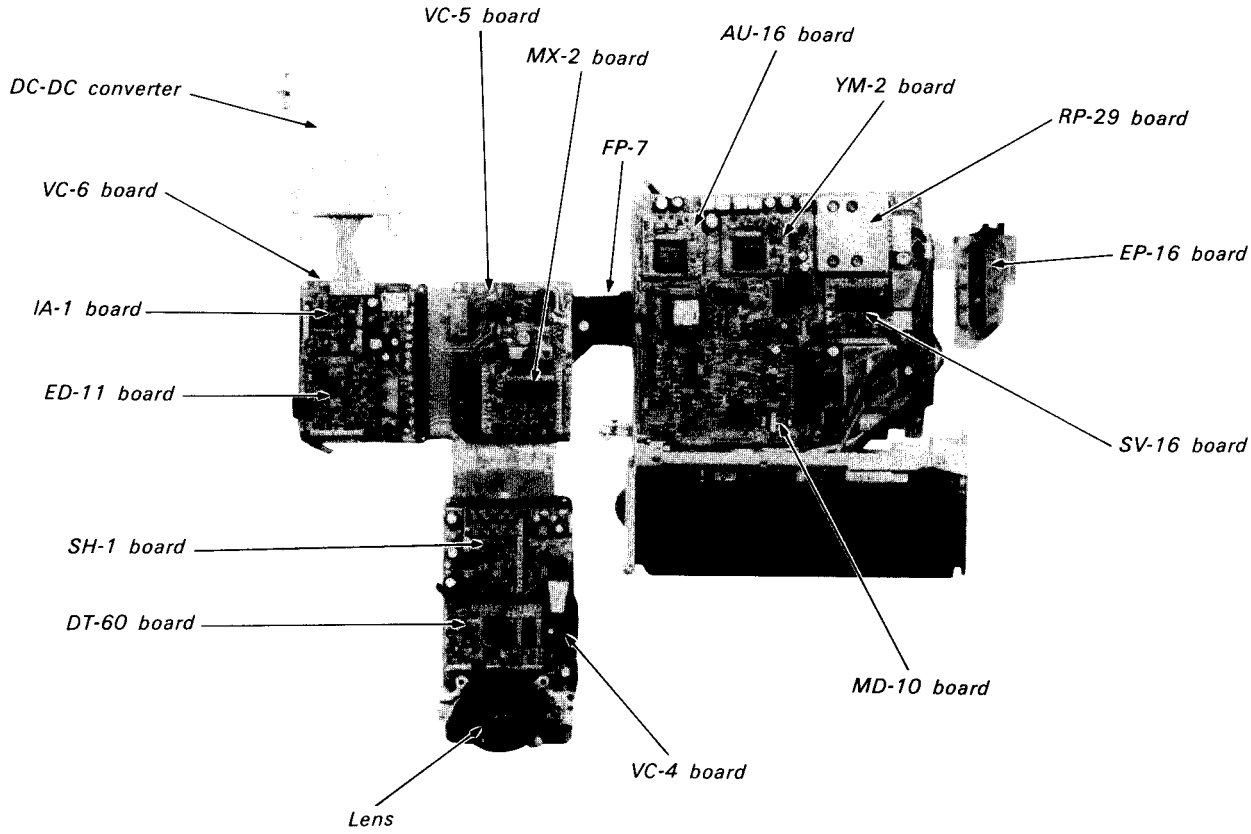

— Soldering side —

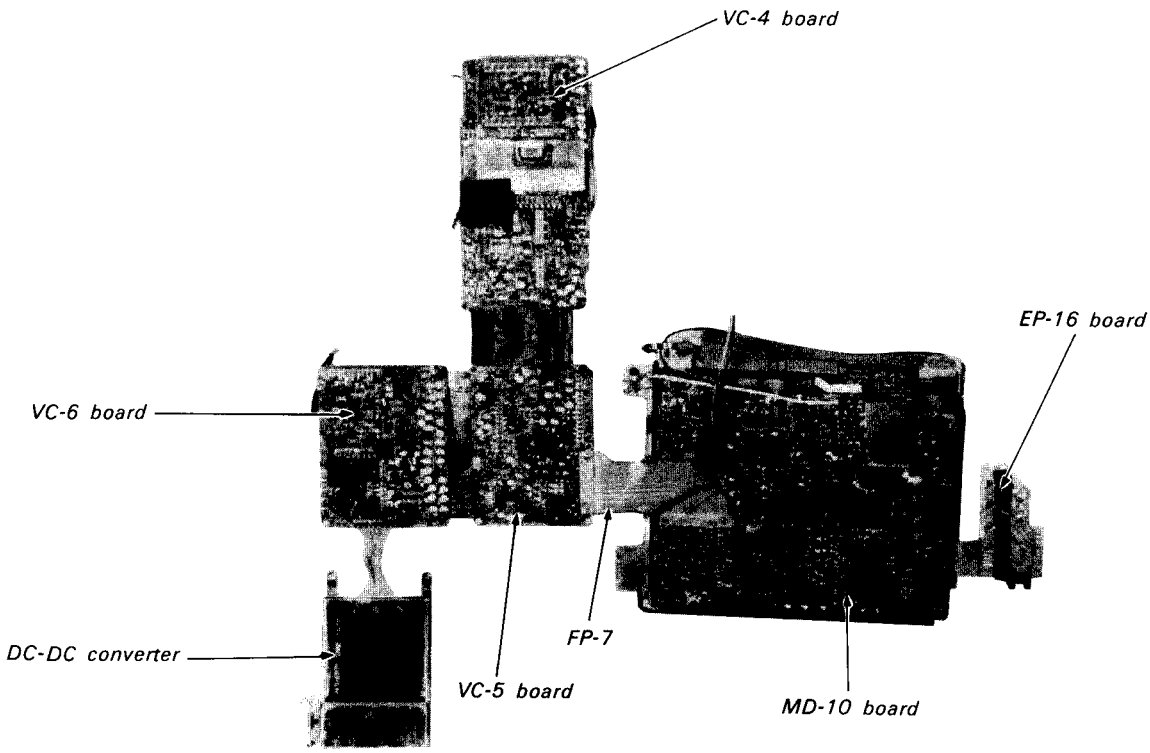

SECTION 3
DIAGRAMS

3-1. CIRCUIT BOARDS LOCATION

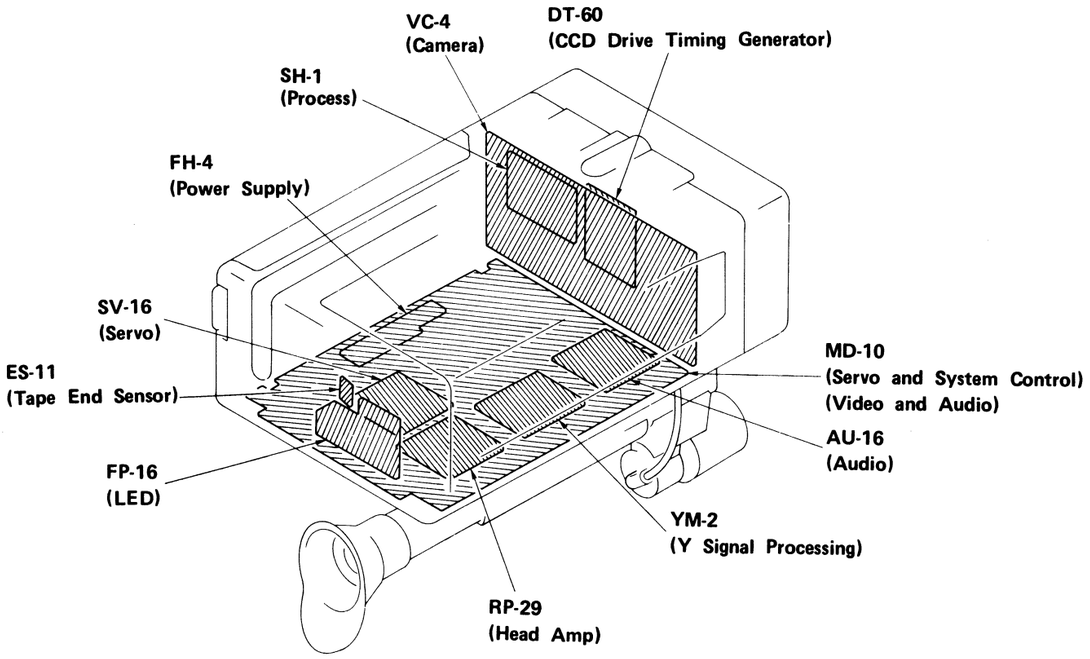

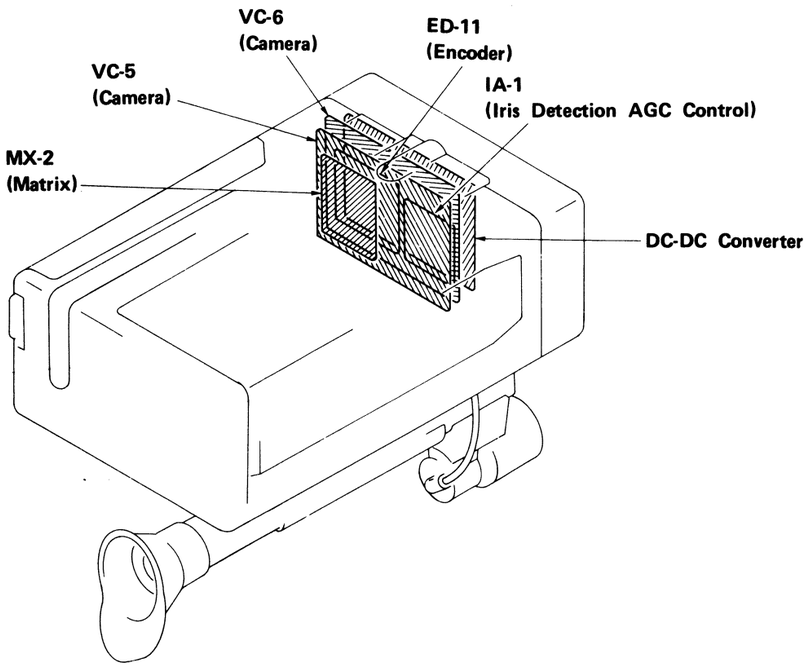

3-2. OVERALL BLOCK DIAGRAM

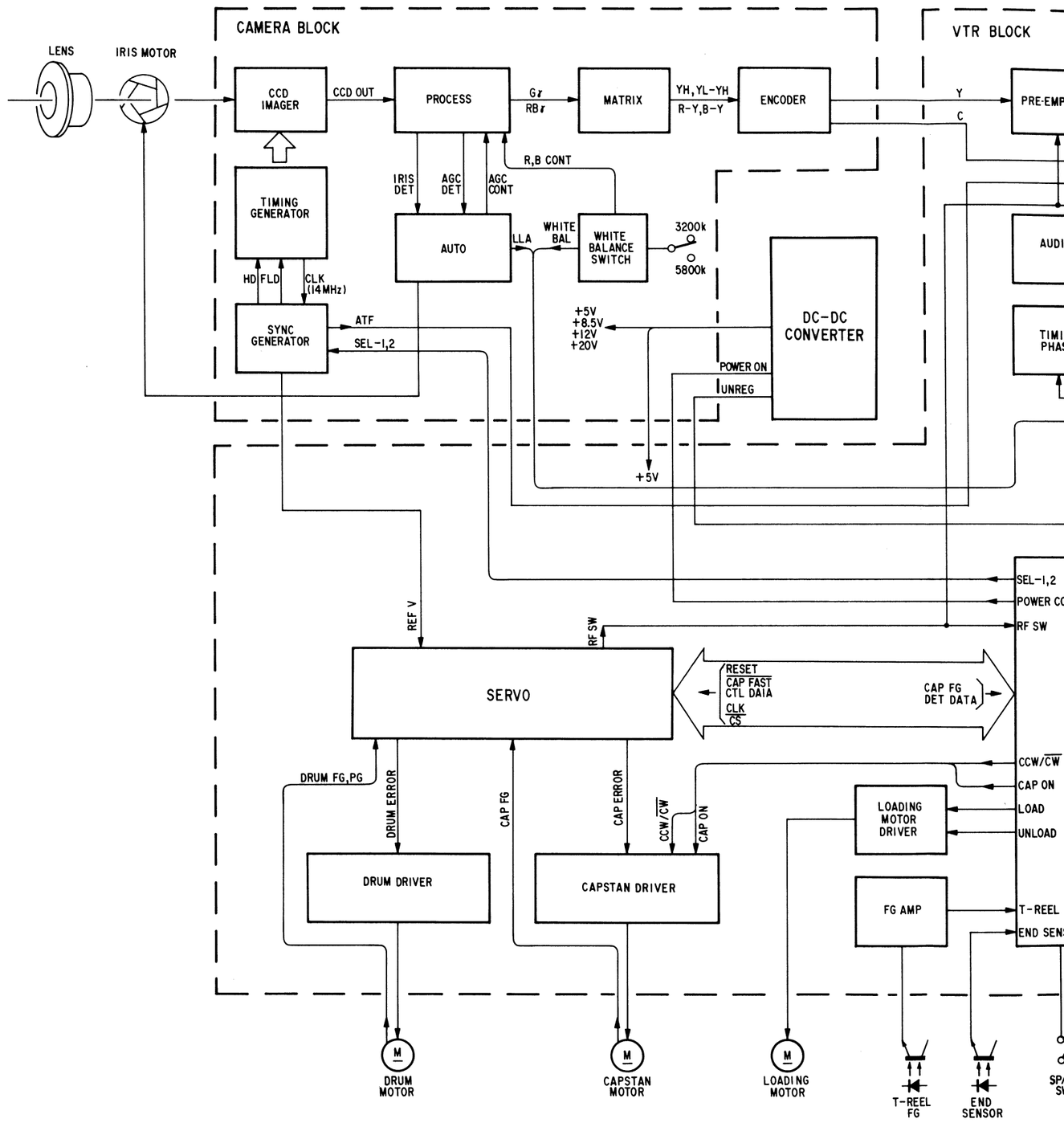

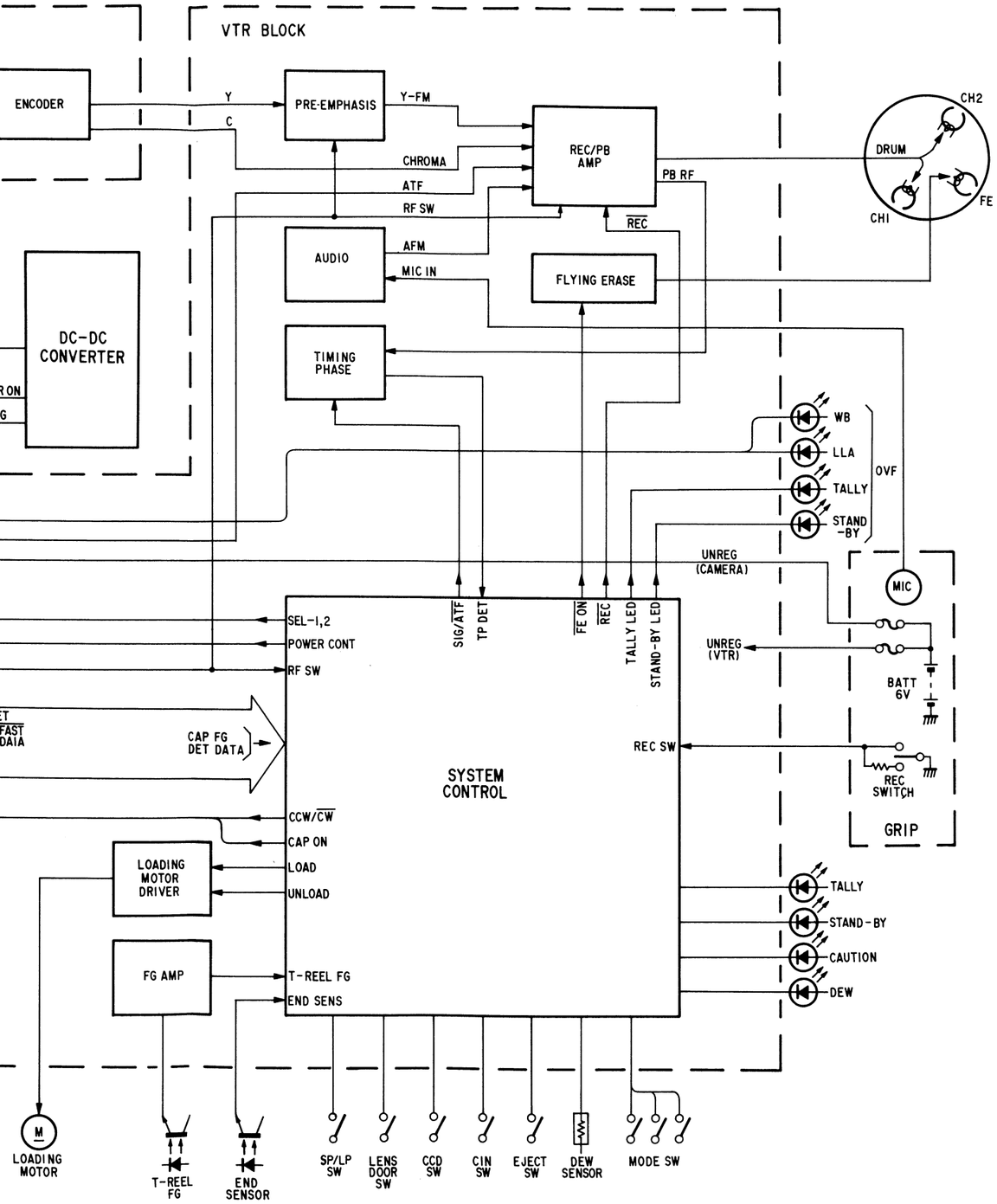
VTR BLOCK
ENCODER
Y
C
PRE-EMPHASIS
Y-FM
CHROMA
ATF
RF SW
REC/PB AMP
PB RF
REC
CH2
DRUM
CH1
FE
AUDIO
AFM
MIC IN
FLYING ERASE
DC-DC CONVERTER
TIMING PHASE
WB
LLA
TALLY
STAND -BY
OVF
UNREG (CAMERA)
MIC
SEL-1,2
POWER CONT
RF SW
SIG/ATF
TP DET
FE ON
REC
TALLY LED
STAND-BY LED
UNREG (VTR)
BATT 6V
CAP FG DET DATA
SYSTEM CONTROL
REC SW
REC SWITCH
GRIP
CCW/CW
CAP ON
LOAD
UNLOAD
LOADING MOTOR DRIVER
TALLY
STAND-BY
CAUTION
DEW
FG AMP
T-REEL FG
END SENS
M
LOADING MOTOR
T-REEL FG
END SENSOR
SP/LP SW
LENS DOOR SW
CCD SW
CIN SW
EJECT SW
DEW SENSOR
MODE SW

3-3. CAMERA BLOCK DIAGRAM

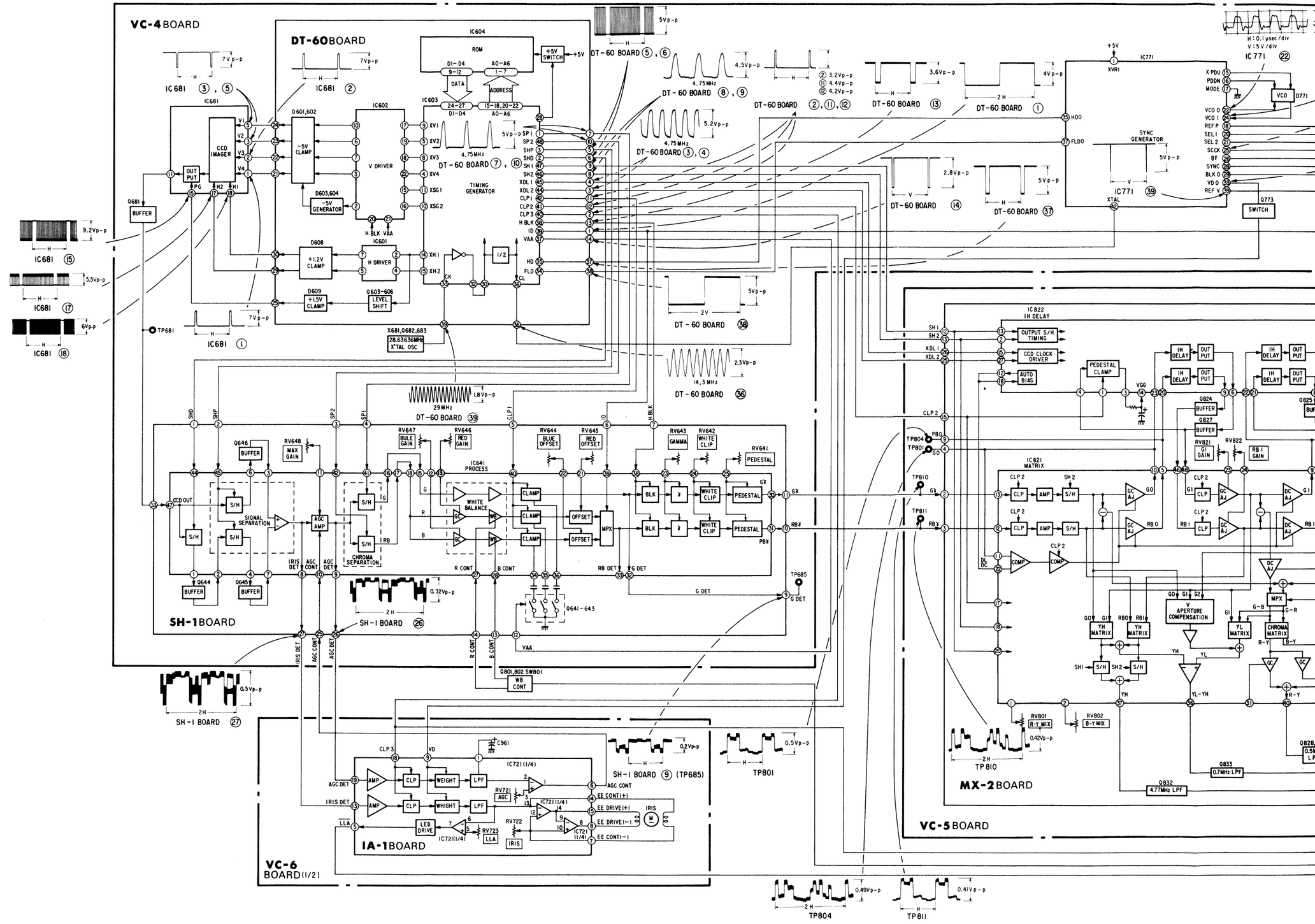

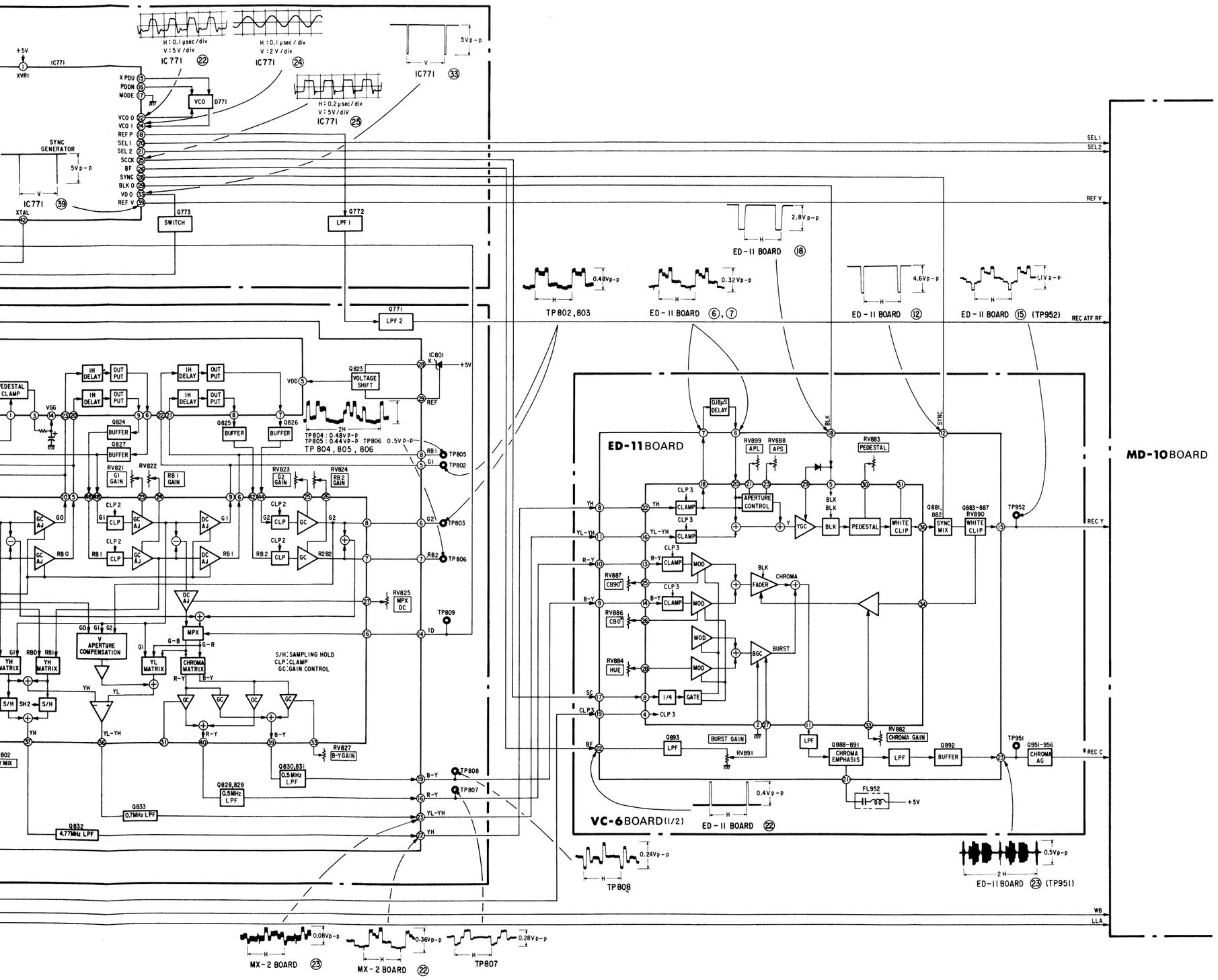

IC771
SYNC GENERATOR
SWITCH
LPF 1
LPF 2
VOLTAGE SHIFT
TP 804, 805, 806
ED-11 BOARD
VC-6 BOARD (1/2)
MD-10 BOARD
APERTURE CONTROL
APERTURE COMPENSATION
S/H: SAMPLING HOLD
CLP: CLAMP
GC: GAIN CONTROL
MX-2 BOARD
TP807
TP808
ED-11 BOARD (22)
ED-11 BOARD (23) (TP951)

3-4. VIDEO BLOCK DIAGRAM

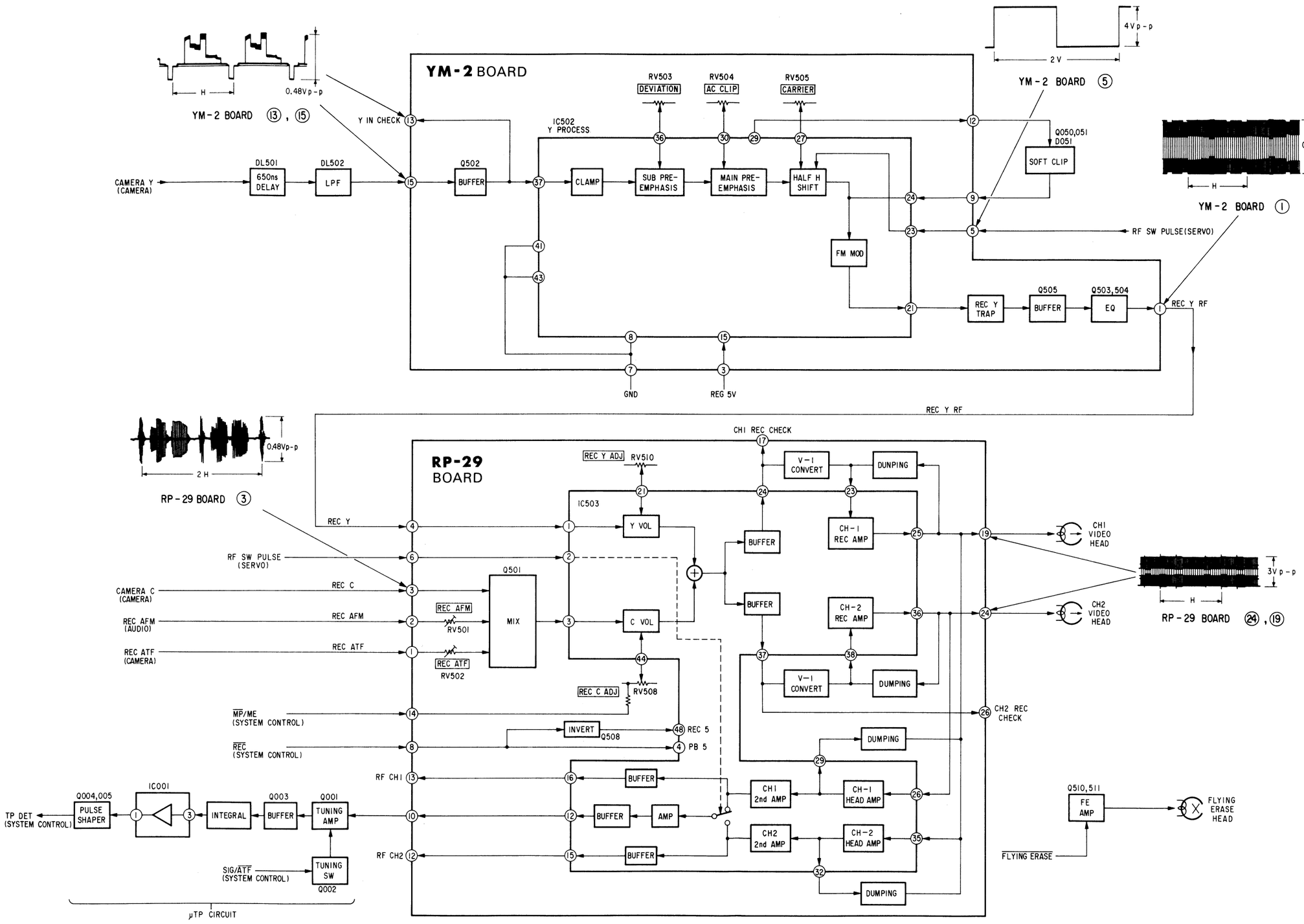

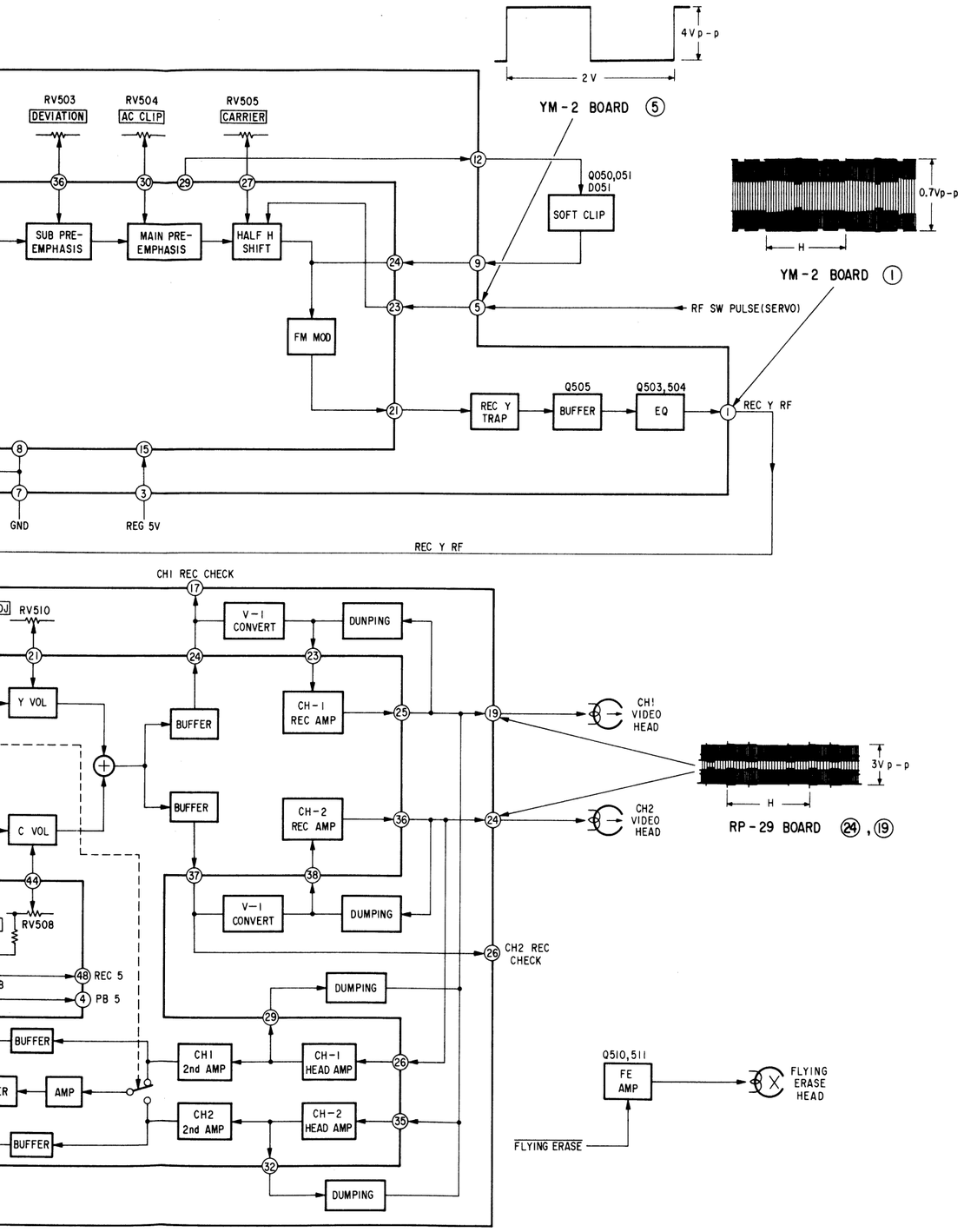
4Vp-p
2V
YM-2 BOARD (5)
RV503
DEVIATION
RV504
AC CLIP
RV505
CARRIER
Q050,051
D051
SOFT CLIP
0.7Vp-p
H
YM-2 BOARD (1)
SUB PRE-EMPHASIS
MAIN PRE-EMPHASIS
HALF H SHIFT
FM MOD
RF SW PULSE(SERVO)
Q505
Q503,504
REC Y TRAP
BUFFER
EQ
REC Y RF
GND
REG 5V
REC Y RF
CH1 REC CHECK
RV510
V-I CONVERT
DUMPING
Y VOL
BUFFER
CH-1 REC AMP
CH1 VIDEO HEAD
3Vp-p
H
C VOL
BUFFER
CH-2 REC AMP
CH2 VIDEO HEAD
RP-29 BOARD (24),(19)
RV508
V-I CONVERT
DUMPING
CH2 REC CHECK
REC 5
PB 5
DUMPING
BUFFER
CH1 2nd AMP
CH-1 HEAD AMP
AMP
CH2 2nd AMP
CH-2 HEAD AMP
BUFFER
Q510,511
FE AMP
FLYING ERASE HEAD
FLYING ERASE
DUMPING

3-5. SERVO BLOCK DIAGRAM

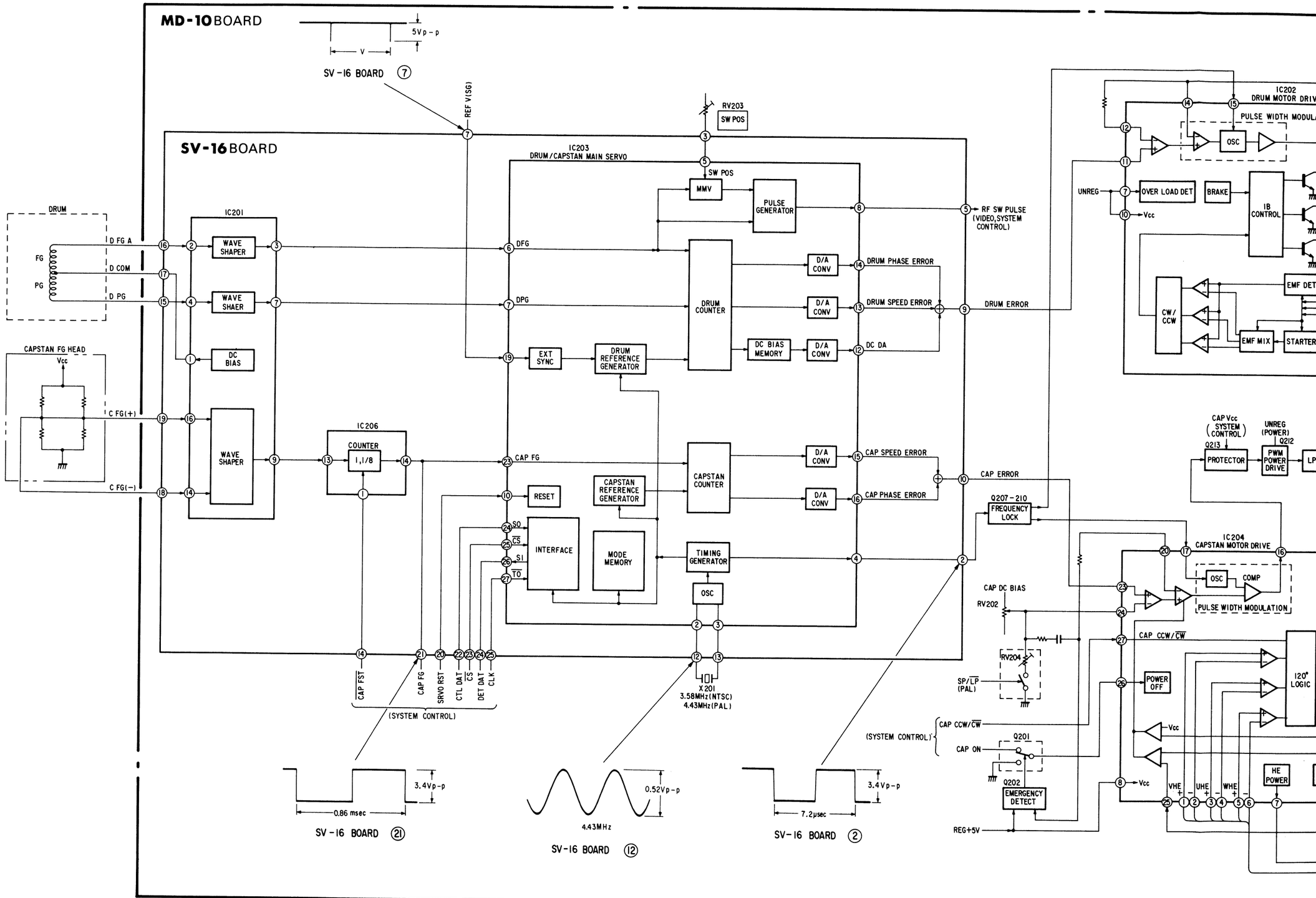

5Vp-p

V

BOARD ⑦

REF V(SG)

RV203
SW POS

IC203
DRUM/CAPSTAN MAIN SERVO

SW POS

MMV

PULSE GENERATOR

RF SW PULSE (VIDEO, SYSTEM CONTROL)

DFG

DPG

DRUM COUNTER

D/A CONV

DRUM PHASE ERROR

D/A CONV

DRUM SPEED ERROR

DRUM ERROR

EXT SYNC

DRUM REFERENCE GENERATOR

DC BIAS MEMORY

D/A CONV

DC DA

IC206

OUNTER

1,1/8

CAP FG

CAPSTAN REFERENCE GENERATOR

CAPSTAN COUNTER

D/A CONV

CAP SPEED ERROR

D/A CONV

CAP PHASE ERROR

CAP ERROR

RESET

SO

CS

SI

TO

INTERFACE

MODE MEMORY

TIMING GENERATOR

OSC

CAP FST

CAP FG

SRVO RST

CTL DAT

CS

DET DAT

CLK

(SYSTEM CONTROL)

X201
3.58MHz(NTSC)
4.43MHz(PAL)

3.4Vp-p

sec

BOARD ㉑

0.52Vp-p

4.43MHz

SV-16 BOARD ⑫

3.4Vp-p

7.2μsec

SV-16 BOARD ②

IC202
DRUM MOTOR DRIVE

PULSE WIDTH MODULATION

OSC

UNREG (POWER)

Q211

PWM POWER DRIVE

LPF

COM

DRUM (U)

DRUM (V)

DRUM (W)

DRUM MOTOR

UNREG

OVER LOAD DET

BRAKE

Vcc

IB CONTROL

UL

VL

WL

EMF DET

CW/CCW

EMF MIX

STARTER

CAP Vcc (SYSTEM CONTROL)

Q213

PROTECTOR

UNREG (POWER)

Q212

PWM POWER DRIVE

LPF

Q207-210

FREQUENCY LOCK

IC204
CAPSTAN MOTOR DRIVE

OSC

COMP

PULSE WIDTH MODULATION

CAP DC BIAS

RV202

RV204

SP/LP (PAL)

CAP CCW/CW

POWER OFF

120° LOGIC

U

V

W

CAP(U)

CAP(V)

CAP(W)

CAPSTAN MOTOR

(SYSTEM CONTROL)

CAP CCW/CW

CAP ON

Q201

Q202

EMERGENCY DETECT

Vcc

HE POWER

IB CONT

VHE

UHE

WHE

VE

HALL DEVICE

SHORT(NTSC)
D207(PAL)

LEVEL SHIFT

REG+5V

UHE(+)(−)
VHE(+)(−)
WHE(+)(−)

3-6. SYSTEM CONTROL BLOCK DIAGRAM

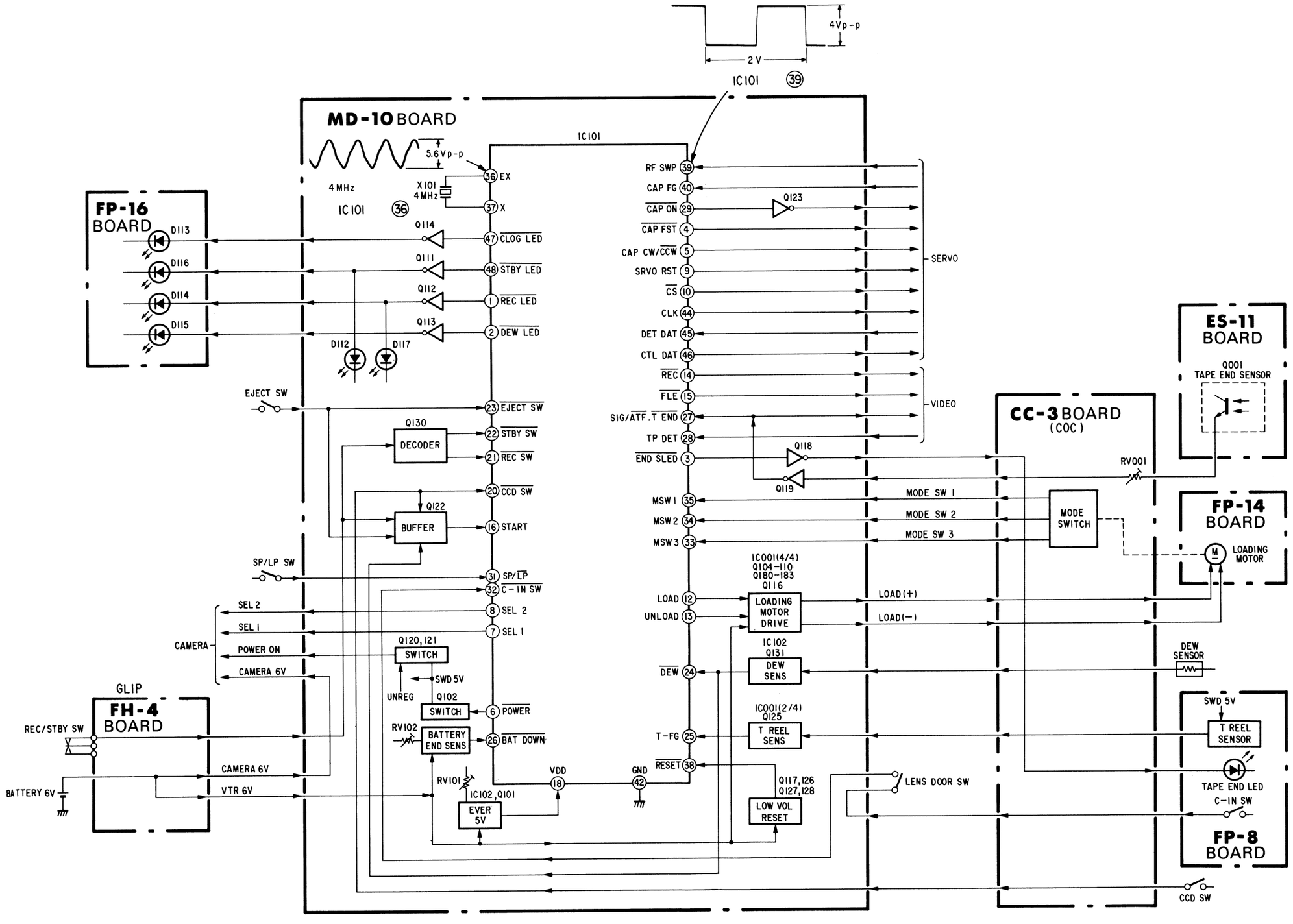

3-7. SYSTEM CONTROL INTERFACE (IC101)

Signal name	I/O	IC101 PIN No.	REC	STANDBY	PB (Connect pin (29) of IC101 to ground)
$\overline{\text{REC LED}}$	O	1	L	H	H
$\overline{\text{STBY LED}}$	O	2	H	L	H
$\overline{\text{END S LED}}$	O	3	*1	H	*1
$\overline{\text{CAP FST}}$	O	4	H	H	H
CAP CCW/$\overline{\text{CW}}$	O	5	H	H	H
$\overline{\text{POWER}}$	O	6	L	L	L
SRVO RST	O	9	H	H	H
$\overline{\text{REC}}$	O	14	L	H	H
$\overline{\text{FLE}}$	O	15	L	H	H
T-FG	I	25			
$\overline{\text{BAT DWN}}$	I	26	H	H	H
SIG/$\overline{\text{ATF • T.END}}$	I/O	27	H	H	H
TP DET	I	28	H	*1	*1
$\overline{\text{CAP ON}}$	O	29	L	L	H
$\overline{\text{CIN SW}}$	I	32	L	L	H
RF SWP	I	39			
CAP FG	I	40			
SEL1	O	7	*2	H	H
SEL2	O	8	*2	H	H
MSW3	I	33	L	L	L
MSW2	I	34	H	H	H
MSW1	I	35	H	H	H

*1 H/L pulse
*2 ATF control signal

3-8. FUNCTION DESCRIPTION OF IC101 PIN (MD-10 BOARD)

Pin no.	Pin name	I/O	I/O rotation mode	Function
1	$\overline{\text{REC LED}}$	O	OPEN DRAIN	Light REC LED.
2	$\overline{\text{DEW LED}}$	O	OPEN DRAIN	Light DEW LED.
3	$\overline{\text{END S LED}}$	O	OPEN DRAIN	Light LED for TAPE END detection.
4	$\overline{\text{CAP FST}}$	O	OPEN DRAIN	Perform high speed rotation of CAP motor during EJECT mode, etc.
5	CAP CCW/$\overline{\text{CW}}$	O	OPEN DRAIN	Convert the rotating direction of CAP motor.
6	$\overline{\text{POWER}}$	O	OPEN DRAIN	Turn the power supply ON/OFF.
7	SEL1	O	OPEN DRAIN	Controls the ATF servo pilot signal during recording mode of operation.
8	SEL2	O	OPEN DRAIN	Controls the ATF servo pilot signal during recording mode of operation.
9	SRVO RST	O	OPEN DRAIN	When power supply is ON and when the DRUM and CAPSTAN are turned ON, reset the internal counter of CX20035.
10	$\overline{\text{CS}}$	O	OPEN DRAIN	A chip select signal for communication with CX20035.
11			OPEN DRAIN	Unused
12	LOAD	O	OPEN DRAIN	Output which renders performing of loading.

Pin no.	Pin name	I/O	I/O rotation mode	Function
13	UNLOAD	O	OPEN DRAIN	Output which renders performing of unloading.
14	$\overline{\text{REC}}$	O	OPEN DRAIN	Operates recording amplifier.
15	$\overline{\text{FLE}}$	O	OPEN DRAIN	Operates FLYING ERASE circuit.
16	START	I	300kΩ PULL DOWN	A trigger input to start the IC.
17				Unused
18	+5V			+5V power supply pin
19				Unused
20	$\overline{\text{CCD SW}}$	I	OPEN DRAIN	Detects that the cassette compartment is DOWN.
21	$\overline{\text{REC SW}}$	I	OPEN DRAIN	Input of REC SW. Switching of REC mode and STBY mode can be performed with this input.
22	$\overline{\text{STBY SW}}$	I	OPEN DRAIN	Input of STBY SW. Switching of input from READY mode to STBY mode is performed with this input.
23	$\overline{\text{EJECT SW}}$	I	OPEN DRAIN	Input of EJECT SW.
24	$\overline{\text{DEW}}$	I	OPEN DRAIN	Drum dew condensation input.
25	T-FG	I	OPEN DRAIN	FG of the reel stand on the T side is input.
26	$\overline{\text{BAT DWN}}$	I	OPEN DRAIN	When the power supply voltage decreases, it becomes "L".
27	SIG/$\overline{\text{ATF • T.END}}$	I/O	OPEN DRAIN	Switches signal necessary during continuous photographing (0). Performs TAPE END detection in REC mode (1).
28	TP DET	I	OPEN DRAIN	Input for conducting timing of continuous photographing.
29	$\overline{\text{CAP ON}}$	O	OPEN DRAIN	Performs ON/OFF of CAPSTAN.
30				
31	SP/$\overline{\text{LP}}$	I	OPEN DRAIN	When set at PAL, tape speed can be converted with this input.
32	$\overline{\text{CIN SW}}$	I	300kΩ PULL UP	This switch detects the recording preventive claw and the AND of LENS DOOR SW, and has a recording preventive function.
33	MSW3	I	300kΩ PULL UP	Inputs with code the position of the mechanism operated by the loading motor.
34	MSW2	I	300kΩ PULL UP	Inputs with code the position of the mechanism operated by the loading motor.
35	MSW1	I	300kΩ PULL UP	Inputs with code the position of the mechanism operated by the loading motor.
36	X'tal IN	I		Clock oscillation element connecting pin.
37	X'tal OUT	O		Clock oscillation element connecting pin.
38	$\overline{\text{RESET}}$	I	300kΩ PULL UP	A trigger input of the reset circuit of IC.
39	RF SWP	I	300kΩ PULL UP	An RF SWITCHING PULSE input.
40	CAP FG	I	300kΩ PULL UP	A CAPSTAN FG input. It controls the amount of feedback of the tape by the number of FG for continuous photographing.
41				Unused
42	GND			Ground pin
43				Unused
44	CLK	O	10kΩ PULL UP	A clock to be used when transferring serial data to CX20035.
45	DET DAT	I	300kΩ PULL UP	Receives state of the DRUM with serial data from CX20035.
46	CTL DAT	O	10kΩ PULL UP	Sends data which determines the state of the DRUM and CAPSTAN to CX20035.
47	$\overline{\text{CLOG LED}}$	O	OPEN DRAIN	Light CAUTION LED.
48	$\overline{\text{STBY LED}}$	O	OPEN DRAIN	Light STBY LED.

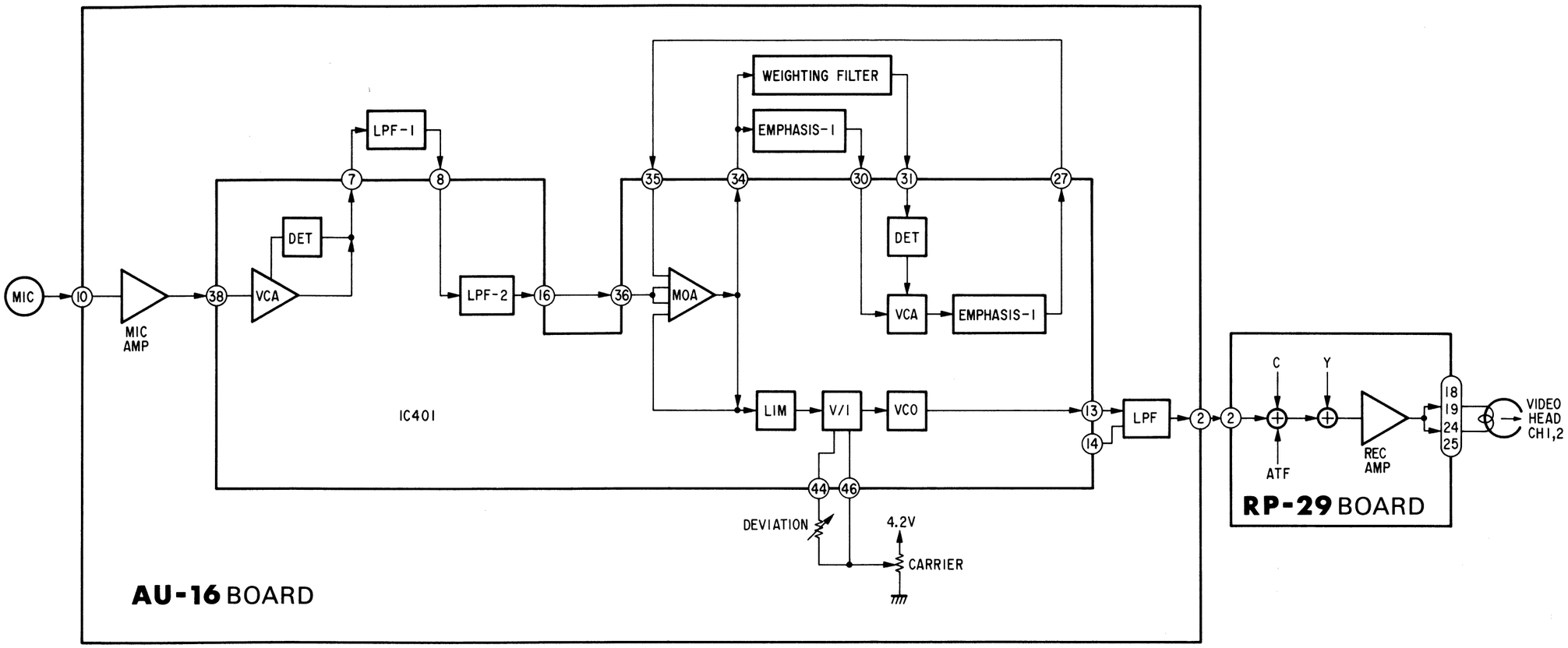

MIC

1kHz ~

LEVEL Ed

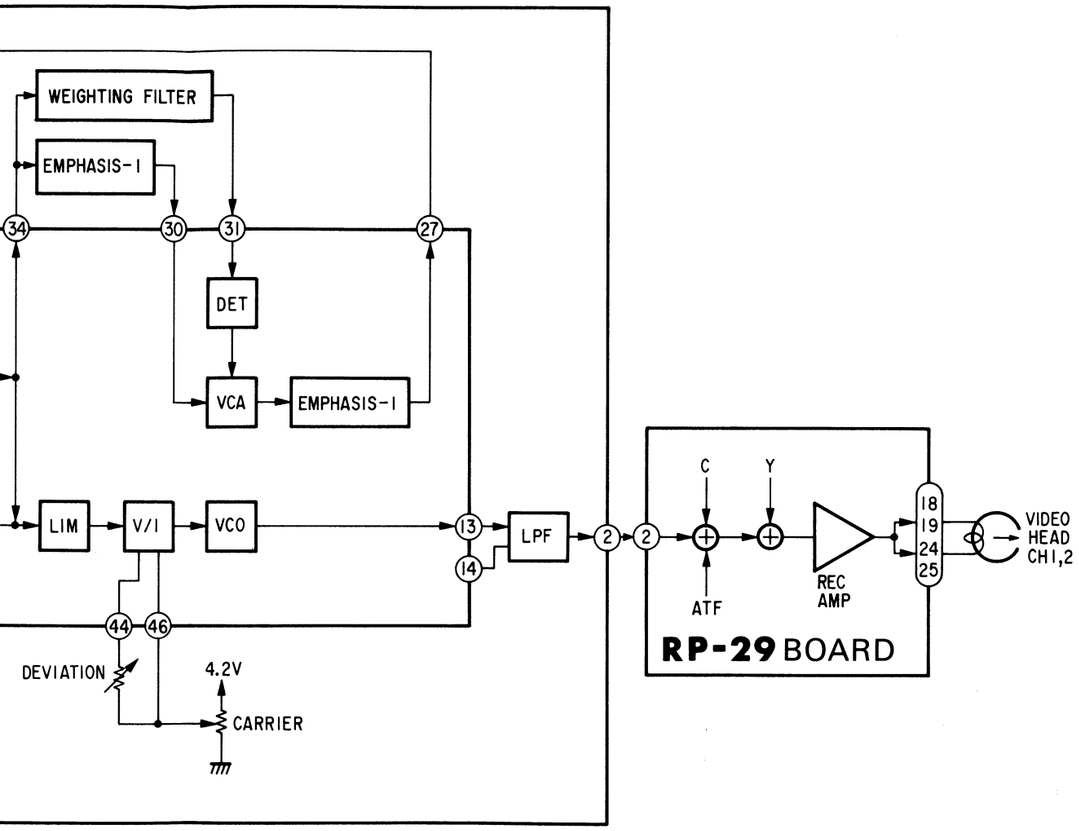

3-10. AUDIO LEVEL DIAGRAM

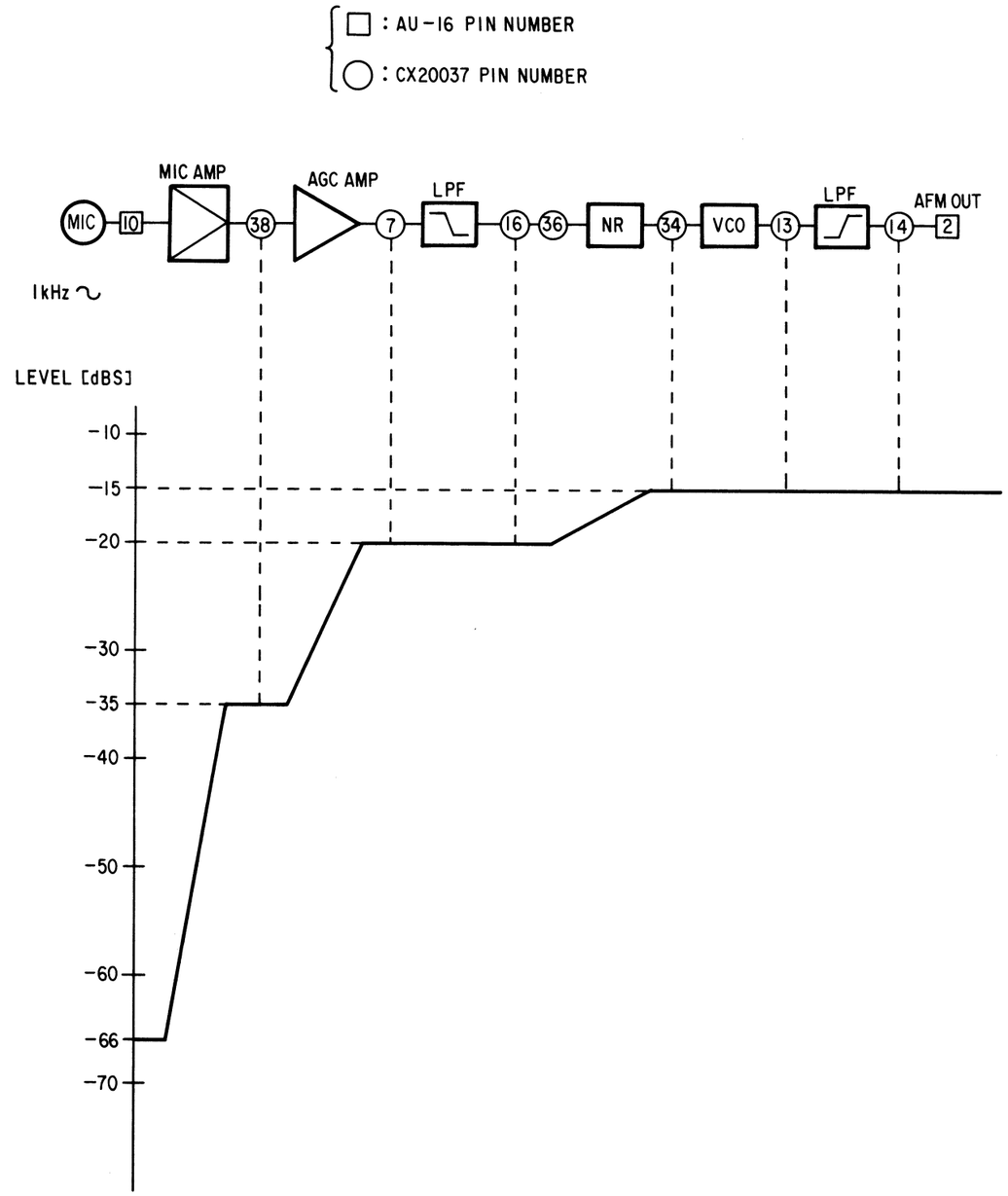

3-11. POWER BLOCK DIAGRAM

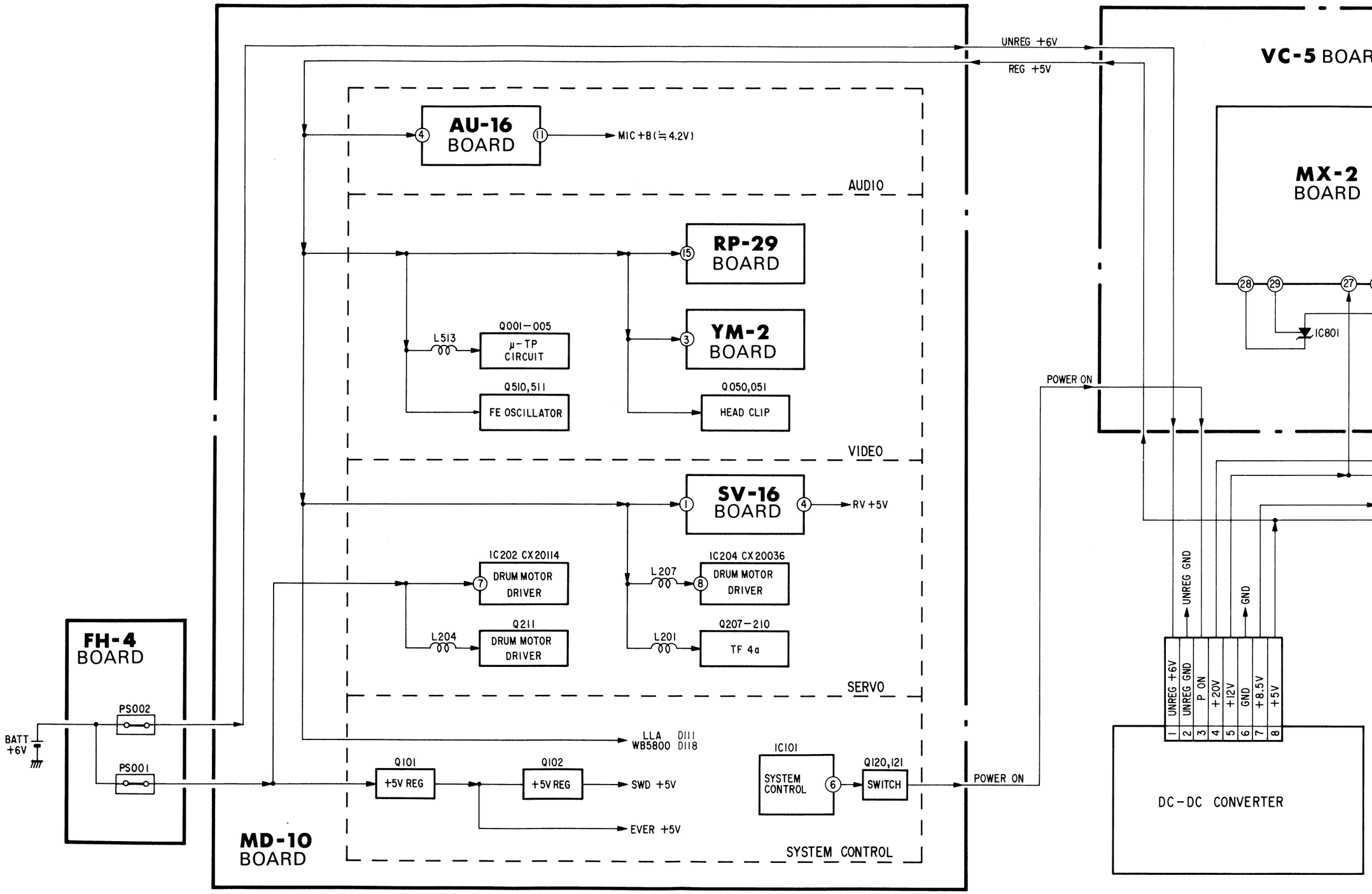

UNREG +6V
REG +5V
MIC +B (≒ 4.2V)
AUDIO
RP-29 BOARD
YM-2 BOARD
Q050,051
HEAD CLIP
VIDEO
SV-16 BOARD
RV +5V
IC204 CX20036
L207
DRUM MOTOR DRIVER
Q207-210
L201
TF 4a
SERVO
LLA DIII
WB5800 DII8
SWD +5V
EVER +5V
IC101
SYSTEM CONTROL
Q120,121
SWITCH
POWER ON
SYSTEM CONTROL

VC-5 BOARD
MX-2 BOARD
17 GND
28 29 27 18 1
IC801
POWER ON
UNREG GND
GND
1 UNREG +6V
2 UNREG GND
3 P ON
4 +20V
5 +12V
6 GND
7 +8.5V
8 +5V
DC-DC CONVERTER

VC-4 BOARD
CCD
33
40
15
DT-60 BOARD
31 GND
23
15
SH-1 BOARD
32 GND
16 GND
TO OSC CIRCUIT, SG CIRCUIT

VC-6 BOARD
13
24
ED-11 BOARD
16 GND
25 GND
5V GEN
17
20
IA-1 BOARD
3 GND
Q951-956
CHROMA AGC

4-1. FRAME SCHEMATIC DIAGRAM

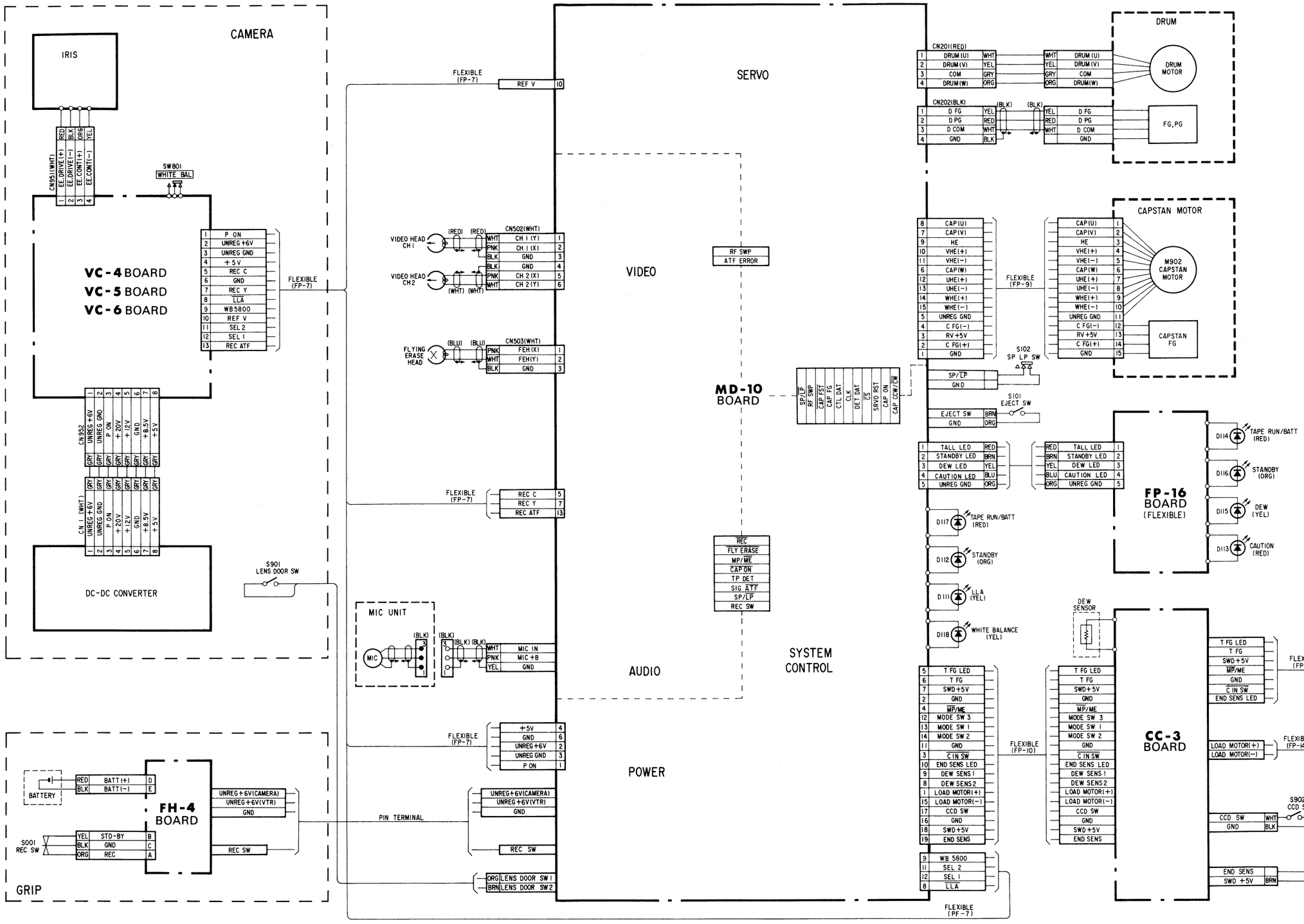

FRAME

15 | 16 | 17 | 18 | 19

D114 TAPE RUN/BATT (RED)

D116 STANDBY (ORG)

D115 DEW (YEL)

D113 CAUTION (RED)

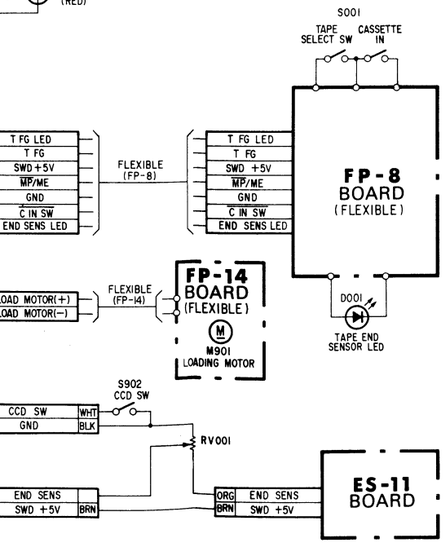

4-2. SCHEMATIC DIAGRAMS AND PRINTED WIRING BOARD

- Caution to be exercised when replacing chip components
  Do not reuse the removed components but use new components.
  Caution should be taken as the negative side of the tantalum capacitor is weak toward heat.
- All capacitors which resistance pressure 50V or less are not indicated except for chemicals and tantalums. The unit is all μF (p is pF).
- All resistors are in ohms, 1/10W in chip resistance; 1/32W in printing resistance.
  kΩ =1000Ω and MΩ =1000kΩ
- All variable and adjustable resistors have characteristics curve B, which definition is omitted.
- ▭ : panel designation.
- ▭ : adjustment designation.
- ▬ : B+ line.

- Measuring conditions of voltage value and waveform
  (1) The subject is color bar of pattern box.
  (2) The voltage value is a reference value between the grounding.
  (The tester used is the digital multimeter DC10MΩ)
  (3) The voltage value are all in the recording mode of operation.

Signal path

- ➡ : REC Y/C Signal
- ➡ : REC Y Signal
- ➡ : REC C Signal

VC-4 BOARD

IC681 ① 7Vp-p	IC771 ㉕ H:0.2μsec/div V:5V/div	DT-60 BOARD ⑬ 3.6Vp-p
IC681 ② 7Vp-p	IC771 ㉝ 5Vp-p	DT-60 BOARD ⑭ 2.8Vp-p
IC681 ③, ⑤ 7Vp-p	IC771 ㊴ 5Vp-p	DT-60 BOARD ㊱ 2.3Vp-p 14.3MHz
IC681 ⑮ 9.2Vp-p	DT-60 BOARD ① 4Vp-p	DT-60 BOARD ㊲ 5Vp-p
IC681 ⑰ 5.5Vp-p	DT-60 BOARD ②,⑪,⑫ ② 3.2Vp-p ⑪ 4.4Vp-p ⑫ 4.2Vp-p	DT-60 BOARD ㊳ 5Vp-p
IC681 ⑱ 6.0Vp-p	DT-60 BOARD ③,④ 5.2Vp-p 4.75MHz	DT-60 BOARD ㊴ 1.8Vp-p 29MHz
Q681 Ⓔ (TP681) 1.2Vp-p	DT-60 BOARD ⑤,⑥ 5Vp-p	SH-1 BOARD ⑨ (TP685) 0.2Vp-p
IC771 ㉒ H:0.1μsec/div V:5V/div	DT-60 BOARD ⑦,⑩ 5Vp-p 4.75MHz	SH-1 BOARD ㉖ 0.32Vp-p
IC771 ㉔ H:0.1μsec/div V:2V/div	DT-60 BOARD ⑧,⑨ 4.5Vp-p 4.75MHz	SH-1 BOARD ㉗ 0.5Vp-p

VC-5 BOARD

TP801 0.5Vp-p	MX-2 BOARD ㉒ 0.36Vp-p
TP802,803 0.48Vp-p	MX-2 BOARD ㉓ 0.08Vp-p
TP804,805,806 TP804:0.48Vp-p TP805:0.44Vp-p TP806:0.5Vp-p	
TP807 0.28Vp-p	
TP808 0.24Vp-p	
TP811 0.41Vp-p	
TP810 0.2Vp-p	0.42Vp-p
MX-2 BOARD ⑳ 0.3Vp-p	
MX-2 BOARD ㉑ 0.4Vp-p	

VC-6 BOARD

ED-II BOARD ⑥,⑦ 0.32Vp-p
ED-II BOARD ⑫ 4.6Vp-p
ED-II BOARD ⑮ (TP952) 1.1Vp-p
ED-II BOARD ⑱ 2.8Vp-p
ED-II BOARD ㉒ 4Vp-p
ED-II BOARD ㉓ (TP951) 0.5Vp-p
IA-I BOARD ⑨ 4.2Vp-p

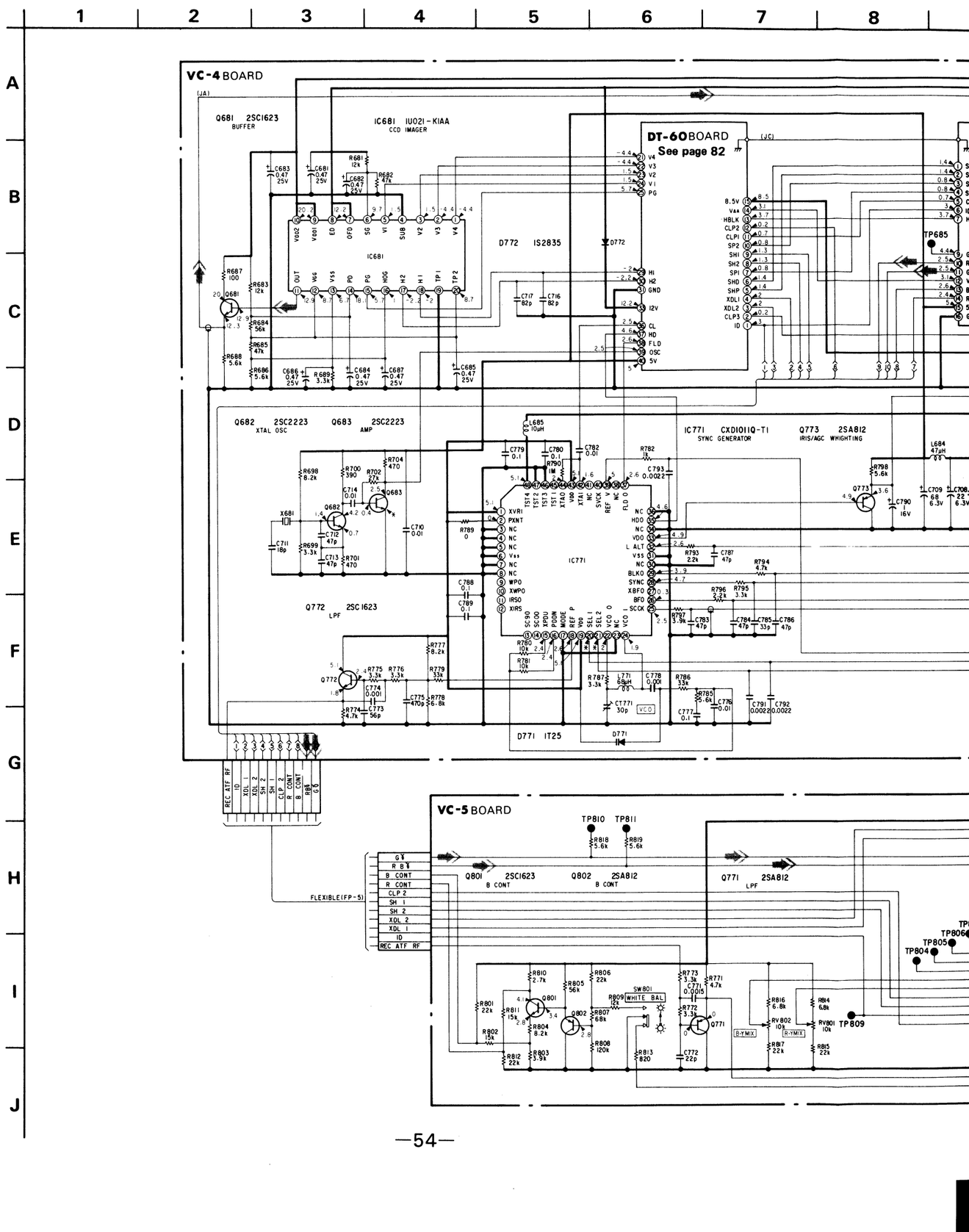

7 8 9 10 11 12 13 14 15 16 17 18 19 20 21 22

SH-1 BOARD
See page 87

VC-6 BOARD

IA-1 BOARD
See page 97

ED-11 BOARD
See page 101

MX-2 BOARD
See page 93

CXD1011Q-T1 GENERATOR

Q773 2SA812 IRIS/AGC WHIGHTING

Q771 2SA812 LPF

IC801 TL431CLPB 9V REG

D951 IS2837

DL951 0.18μs

Q953 2SC1623 BUFFER
Q956 2SC1623 BUFFER
Q952 SC1623 AGC AMP
Q955 2SA812 AGC DET
Q951 2SC1623 AGC AMP
Q954 SC1623 AMP

DC-DC CONVERTER

TO MD-10 BOARD
FLEXIBLE (FP-7)

VC-4, 5, 6 (CAMERA) PRINTED WIRING BOARDS

- ⊗ : mark is slew hole.
- ○— : lead wire attached to the component side.
- ●— : lead wire attached to the pattern side.
- ▬ : pattern from the side which enables seeing.
- ▬ : pattern of the rear side.
- ▬ : B+ pattern.
- The voltage value is all recording mode of operation.

Note

Soldering side: Parts on the soldering side being seen from the soldering are stated.

Component side: Parts on the component side being seen from the component are stated.

Regarding color indication of patterns

* Patterns being seen in the state from the surface side are indicated in gray pattern and red pattern (B+ pattern).

* Pattern being seen in the state of the rear surface side is indicated in green pattern.

VC-6

VC-5

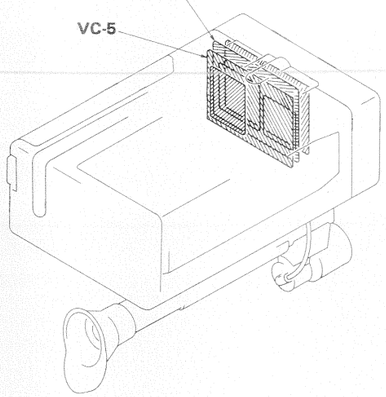

VC-4

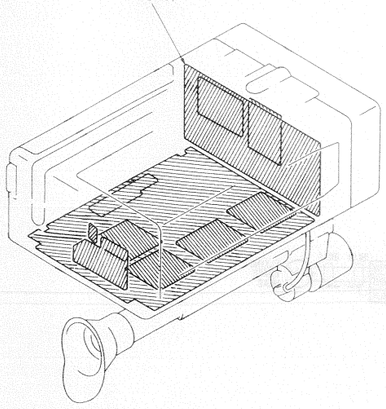

VC-4 BOARD (SOLDER SIDE)

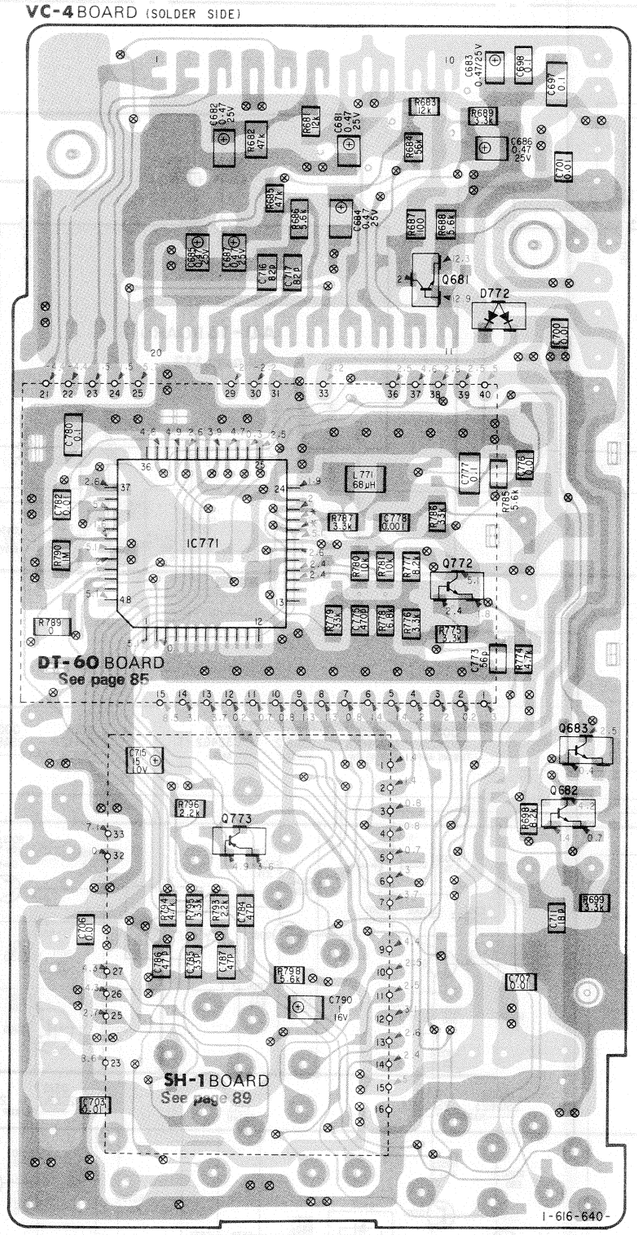

Q, IC	D	ADJ	TP
IC681			
681	772		
		CT771	
IC771	771		
772			
683			
682			
773			681
			682
			685
			690
			691
Q, IC	D	ADJ	TP

VC-4 BOARD (COMPONENT SIDE)

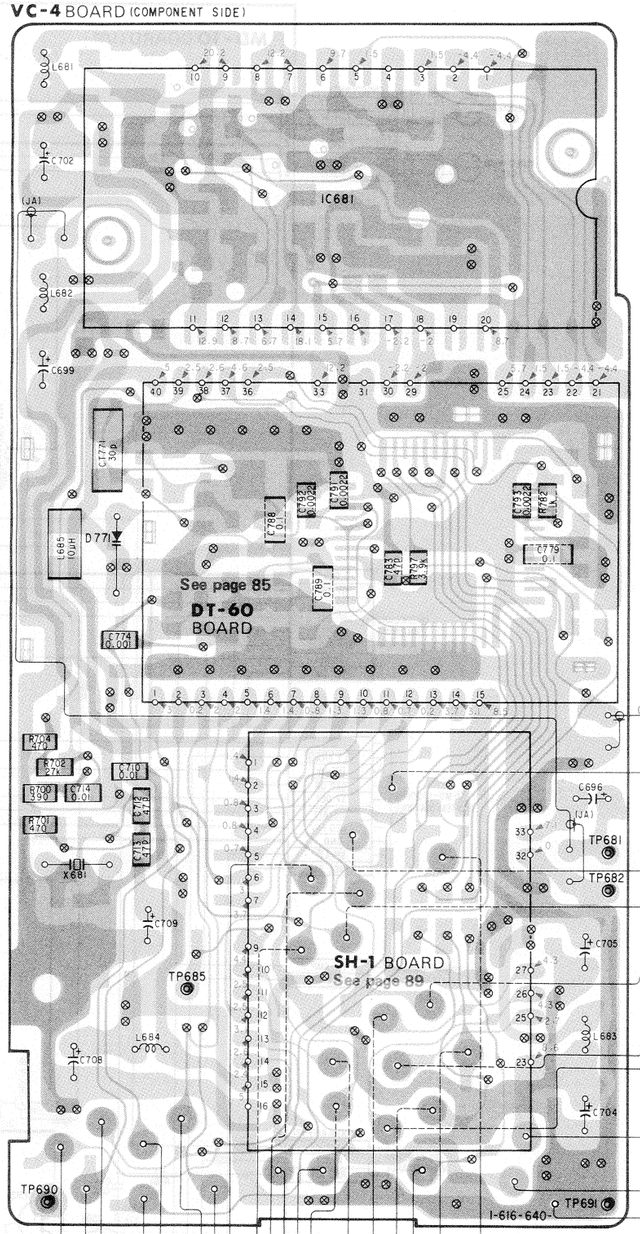

Q IC
ADJ
TP

VC-5 BOARD (SOLDER SIDE)

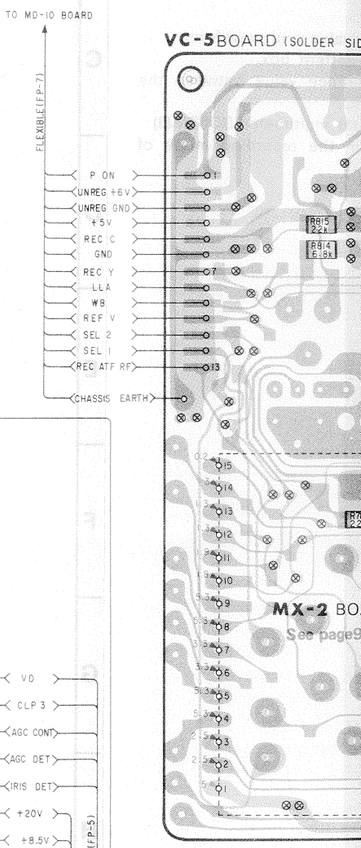

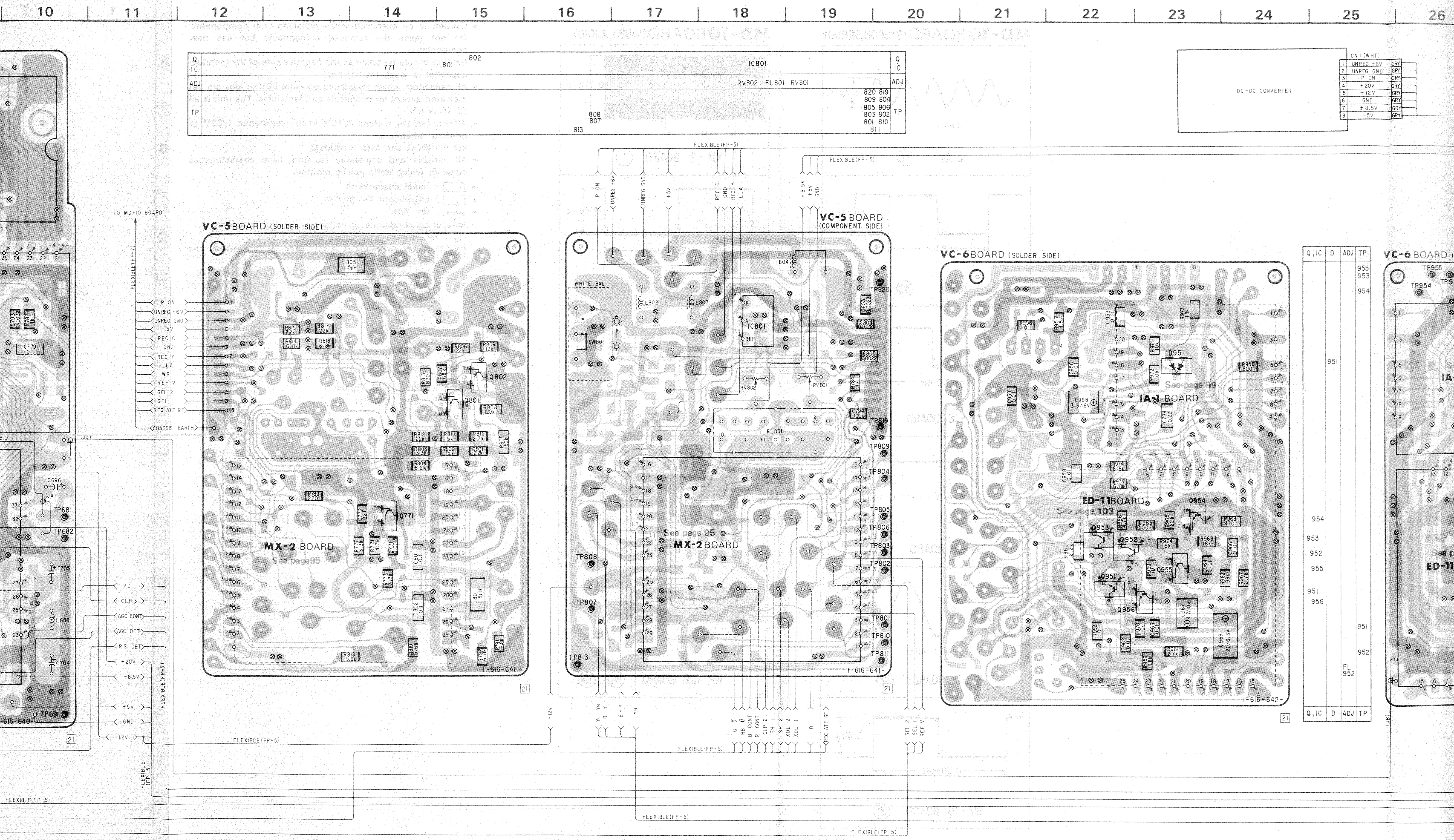
Q IC 771 801 802 IC801
ADJ RV802 FL801 RV801
TP 808 807 813 820 819 809 804 805 806 803 802 801 810 811
DC-DC CONVERTER
CN1 (WHT)
1 UNREG +6V GRY
2 UNREG GND GRY
3 P ON GRY
4 +20V GRY
5 +12V GRY
6 GND GRY
7 +8.5V GRY
8 +5V GRY
TO MD-10 BOARD
FLEXIBLE(FP-7)
P ON
UNREG +6V
UNREG GND
+5V
REC C
GND
REC Y
LLA
WB
REF V
SEL 2
SEL 1
REC ATF RF
CHASSIS EARTH
VC-5 BOARD (SOLDER SIDE)
MX-2 BOARD
See page95
1-616-641-
VC-5 BOARD (COMPONENT SIDE)
WHITE BAL
SW801
IC801
FL801
See page 95
MX-2 BOARD
FLEXIBLE(FP-5)
VD
CLP 3
AGC CONT
AGC DET
IRIS DET
+20V
+8.5V
+5V
GND
+12V
-616-640-
+12V
YL-YH
R-Y
B-Y
YH
G ϕ
RB ϕ
B CONT
R CONT
CLP 2
SH 1
SH 2
XDL 2
XDL 1
ID
REC ATF RF
SEL 2
SEL 1
REF V
VC-6 BOARD (SOLDER SIDE)
IA-1 BOARD
See page 99
ED-11 BOARD
See page 103
1-616-642-
Q,IC D ADJ TP
955 953 954 951
954 953 952 955 951 956
951 952
FL 952
VC-6 BOARD

16 17 18 19 20 21 22 23 24 25 26 27 28 29 30 31

IC801 | Q IC
RV802 FL801 RV801 | ADJ
820 819 / 809 804 / 805 806 / 803 802 / 801 810 / 811 | TP
808 / 807 / 813

DC-DC CONVERTER

CN1 (WHT)

1	UNREG +6V	GRY
2	UNREG GND	GRY
3	P ON	GRY
4	+20V	GRY
5	+12V	GRY
6	GND	GRY
7	+8.5V	GRY
8	+5V	GRY

LENS
IRIS
RED EE DRIVE(+)
BLK EE DRIVE(-)
ORG EE CONT(+)
YEL EE CONT(-)

FLEXIBLE(FP-5)

P ON, UNREG +6V, UNREG GND, +5V, REC C, GND, REC Y, LLA, +8.5V, +5V, GND

VC-5 BOARD (COMPONENT SIDE)

WHITE BAL, SW801, L802, L803, L804, IC801, REF, RV802, RV801, FL801, TP820, TP819, TP809, TP804, TP805, TP806, TP803, TP802, TP801, TP810, TP811, TP808, TP807, TP813

See page 95
MX-2 BOARD

I-616-641-

+5V, +8.5V, GND, +12V, +20V, P ON, UNREG GND, UNREG +6V → CN952

EE CONT-, EE CONT+, EE DRIVE(-), EE DRIVE(+) → CN951(WHT)

VC-6 BOARD (SOLDER SIDE)

D951, R973 1K, R956, R957 1.5K, C953 0.01, C956 0.01, C968 3.3/16V, C954 0.22, R958 820, R972 100K

See page 99
IA-1 BOARD

R974 6.8K, R975 6.8K, C958 0.01

ED-11 BOARD

See page 103

Q954, Q953, Q952, Q951, Q955, Q956, R960 2.2K, R959 1.8K, R961 2.7K, R962 1K, R963 1.8K, R964 1.8K, R965 2.2K, R966 2.2K, R967 1M, R968 470, R969 2.2K, R970 10K, C959 0.01, C960 0.01, C961 0.01, C962 0.01, C963 0.01, C964 0.01, C965 0.01, C966 0.01, C967 47/10V, C969 22/6.3V

I-616-642-

Q,IC	D	ADJ	TP
			955
			953
			954
	951		
954			
953			
952			
955			951
951			952
956		FL 952	

VC-6 BOARD (COMPONENT SIDE)

TP955, TP954, TP953, CN952, CN951, C954, L952, C955, C961, C960, C957, L953, DL951, FL952, TP951, TP952

See page 99
IA-1 BOARD

See page 103
ED-11 BOARD

I-616-642-

P ON, UNREG +6V, UNREG GND, +5V, REC C, GND, REC Y, LLA, GND, +5V, +8.5V → FLEXIBLE(FP-5)

IRIS DET, AGC DET, AGC CONT, CLP 3, VD → FLEXIBLE (FP-5)

YL-YH, R-Y, B-Y, YH, L ALT, BLK, SYNC, BF, +20V, +8.5V, +5V, GND, +12V → FLEXIBLE (FP-5)

+12V, YL-YH, R-Y, B-Y, YH

G Ø, RB Ø, B CONT, R CONT, CLP 2, SH 1, SH 2, XDL 2, XDL 1, ID, REC ATF RF, SEL 2, SEL 1, REF V → FLEXIBLE(FP-5)

FLEXIBLE(FP-5)

FLEXIBLE(FP-5)

VIDEO, AUDIO	VIDEO, AUDIO

MD-10 BOARD (SYSCON,SERVO)

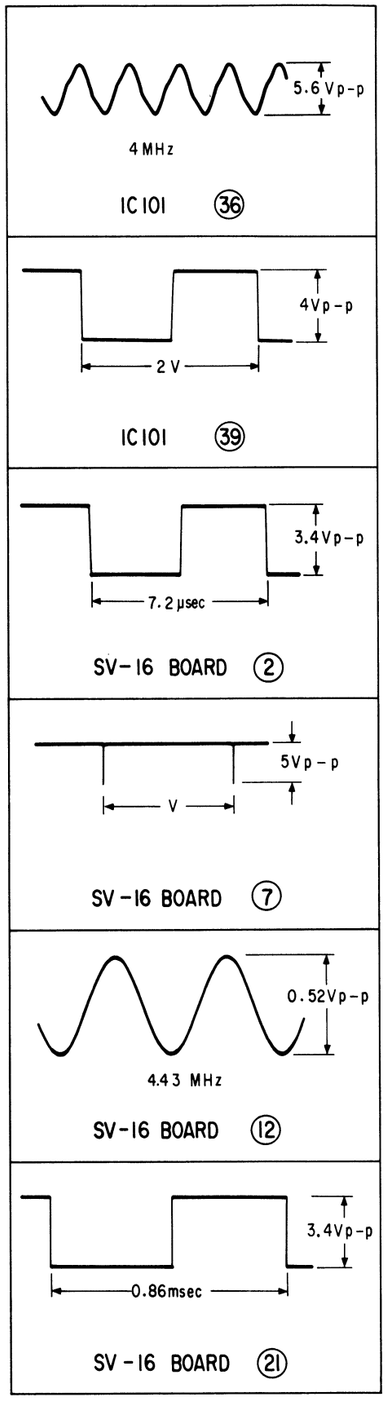

MD-10 BOARD (VIDEO, AUDIO)

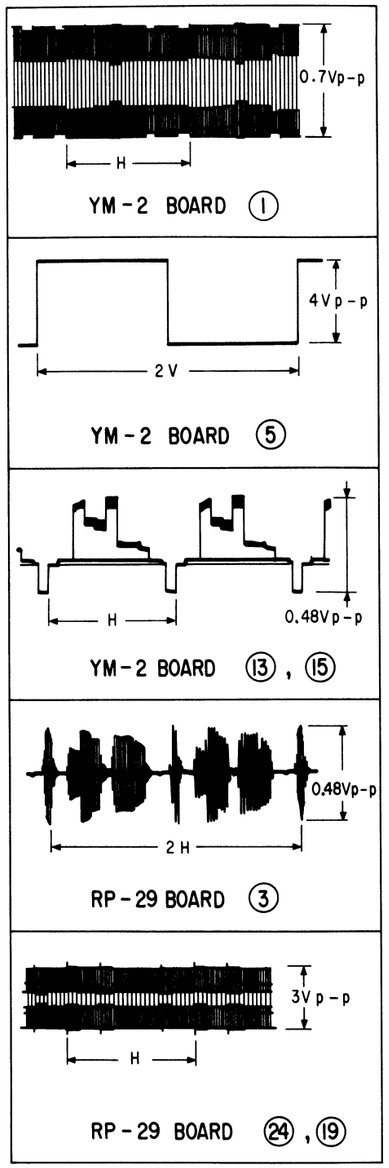

MD-10 BOARD (SYSCON,SERVO)

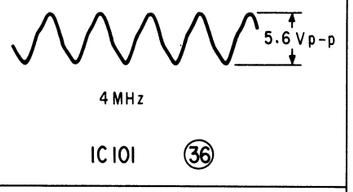

IC 101 (36)

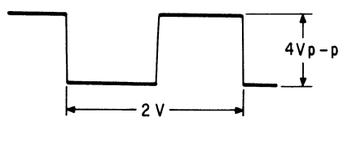

IC 101 (39)

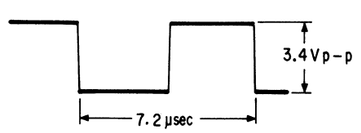

SV-16 BOARD (2)

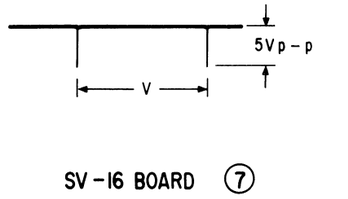

SV-16 BOARD (7)

SV-16 BOARD (12)

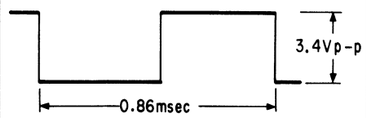

SV-16 BOARD (21)

MD-10 BOARD (VIDEO, AUDIO)

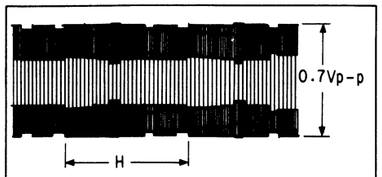

YM-2 BOARD (1)

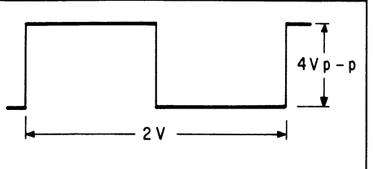

YM-2 BOARD (5)

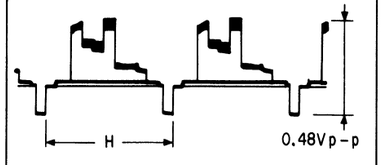

YM-2 BOARD (13), (15)

RP-29 BOARD (3)

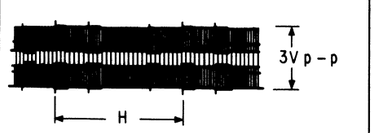

RP-29 BOARD (24), (19)

- Caution to be exercised when replacing chip components
  Do not reuse the removed components but use new components.
  Caution should be taken as the negative side of the tantalum capacitor is weak toward heat.
- All capacitors which resistance pressure 50V or less are not indicated except for chemicals and tantalums. The unit is all µF (p is pF).
- All resistors are in ohms, 1/10W in chip resistance; 1/32W in printing resistance.
  kΩ =1000Ω and MΩ =1000kΩ
- All variable and adjustable resistors have characteristics curve B, which definition is omitted.
- ▭ : panel designation.
- ▭ : adjustment designation.
- ▬ : B+ line.
- Measuring conditions of voltage value and waveform
  (1) The subject is color bar of pattern box.
  (2) The voltage value is a reference value between the grounding.
  (The tester used is the digital multimeter DC10MΩ)
  (3) The voltage value are all in the recording mode of operation.

Signal path

- ➡ : REC Y Signal
- ➡ : REC C Signal
- ➡ : REC Y/C Signal

MD-10 (VIDEO, AUDIO) SCHEMATIC DIAGRAM

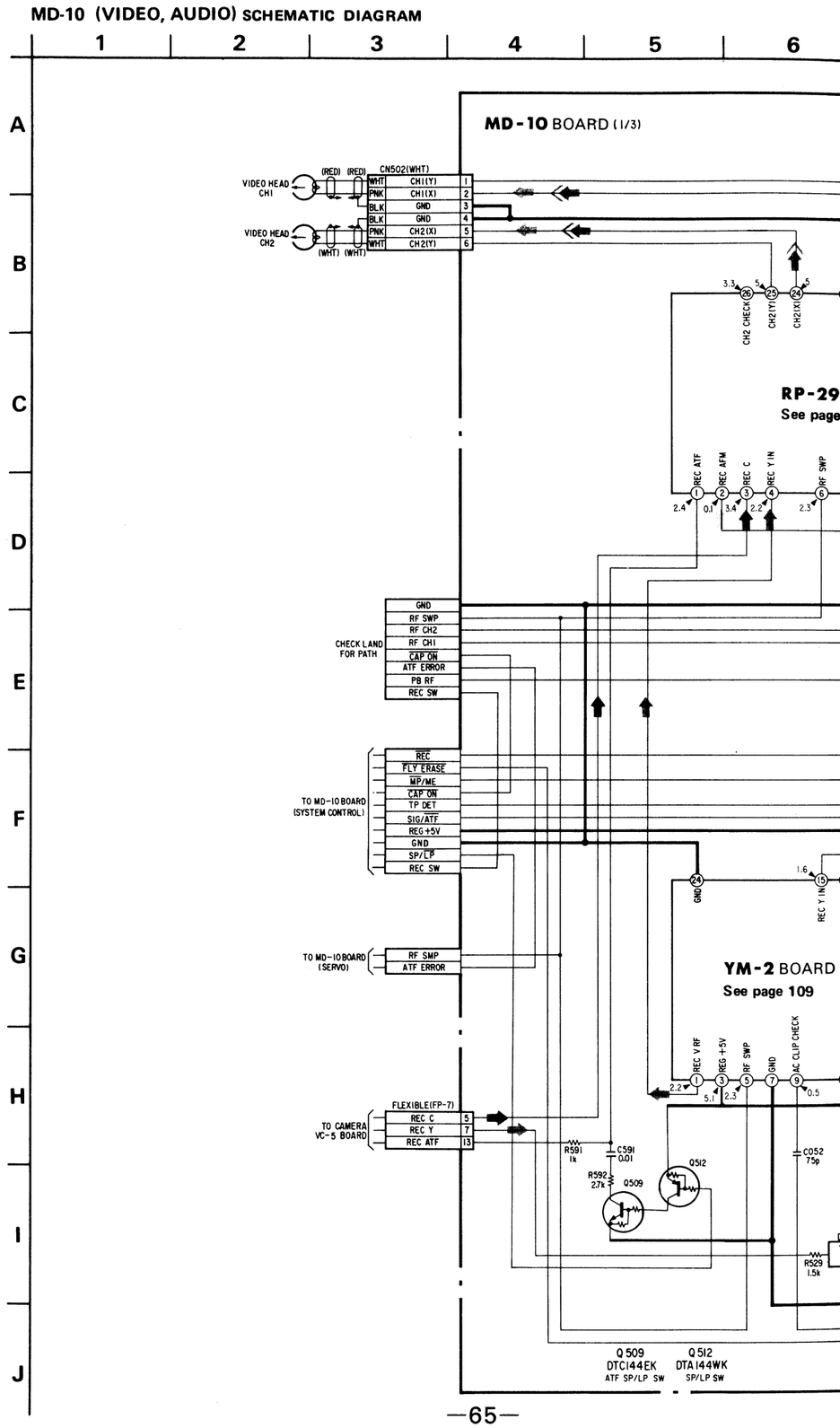

en replacing chip components
ed components but use new

he negative side of the tantalum
eat.
ce pressure 50V or less are not
ls and tantalums. The unit is all

0W in chip resistance; 1/32W in

00kΩ
resistors have characteristics
omitted.

ion.

ltage value and waveform
ar of pattern box.
a reference value between the

digital multimeter DC10MΩ)
all in the recording mode of

MD-10 (VIDEO, AUDIO) SCHEMATIC DIAGRAM

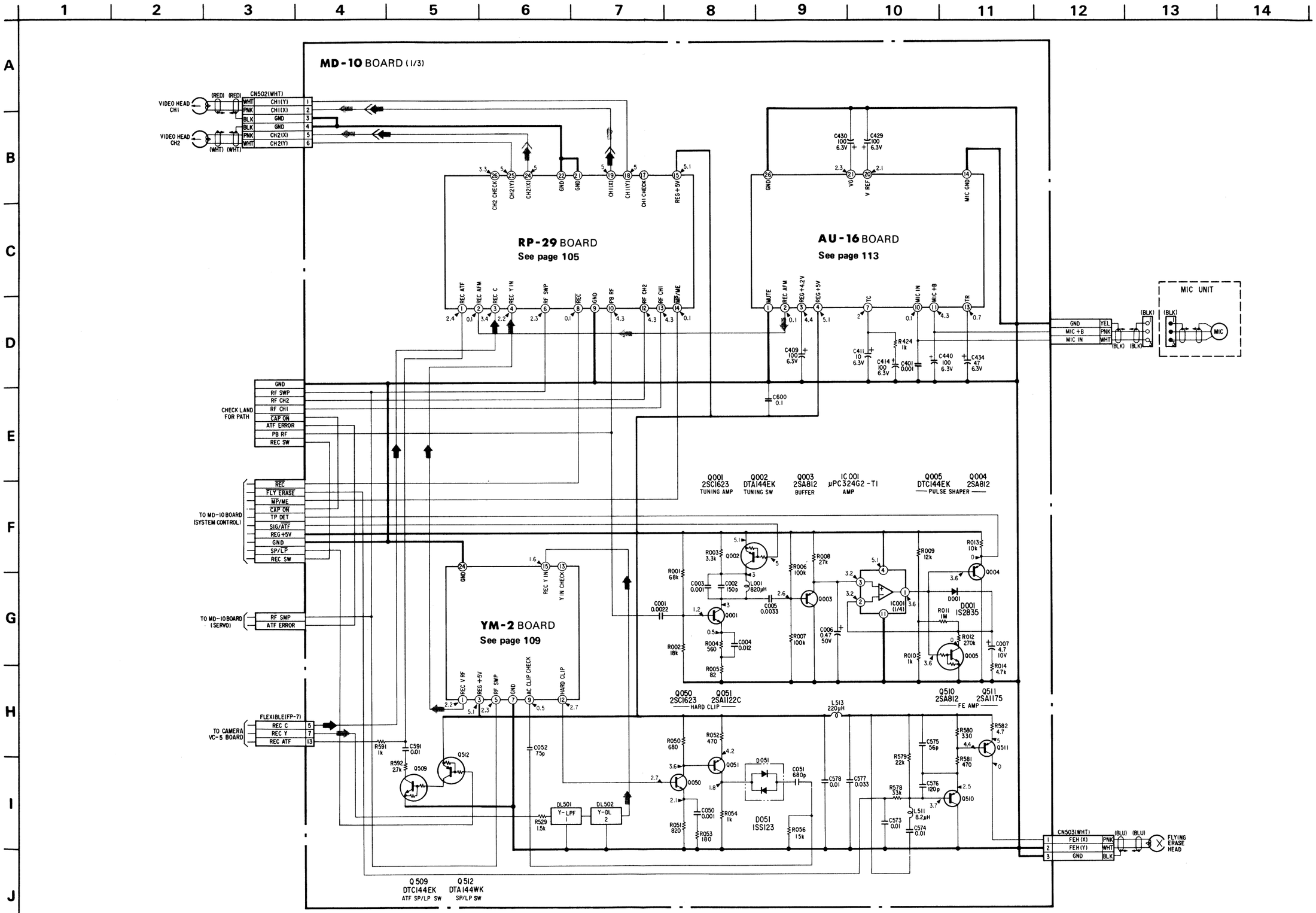

MD-10 (VIDEO, AUDIO), CC-3 (MODE SWITCH, DEW SENSOR DETECTION), ES-11 (TAPE END SENSOR), FH-4 (POWER SUPPLY), FP-8 (TAPE SELECT, CASSETTE-IN SWITCH), FP-14 (LOADING MOTOR), FP

- ⊗ : mark is slew hole.
- ○— : lead wire attached to the component side.
- ●— : lead wire attached to the pattern side.
- ▬ : pattern from the side which enables seeing.
- ▬ : pattern of the rear side.
- ▬ : B+ pattern.
- ▨ : printing resistance.
- The voltage value is all recording mode of operation.
- Digital transistor (MD-10 : Q002, 005, 102, 111, 112, 113, 114, 118, 120, 121, 128, 131, 201, 216, 217, 509, 512) transistor with resistors.
  Refer to the MD-10 board schematic diagram for digital transistor.

Note

Soldering side: Parts on the soldering side being seen from the soldering are stated.

Component side: Parts on the component side being seen from the component are stated.

Regarding color indication of patterns

* Patterns being seen in the state from the surface side are indicated in gray pattern and red pattern (B+ pattern).

* Pattern being seen in the state of the rear surface side is indicated in green pattern.

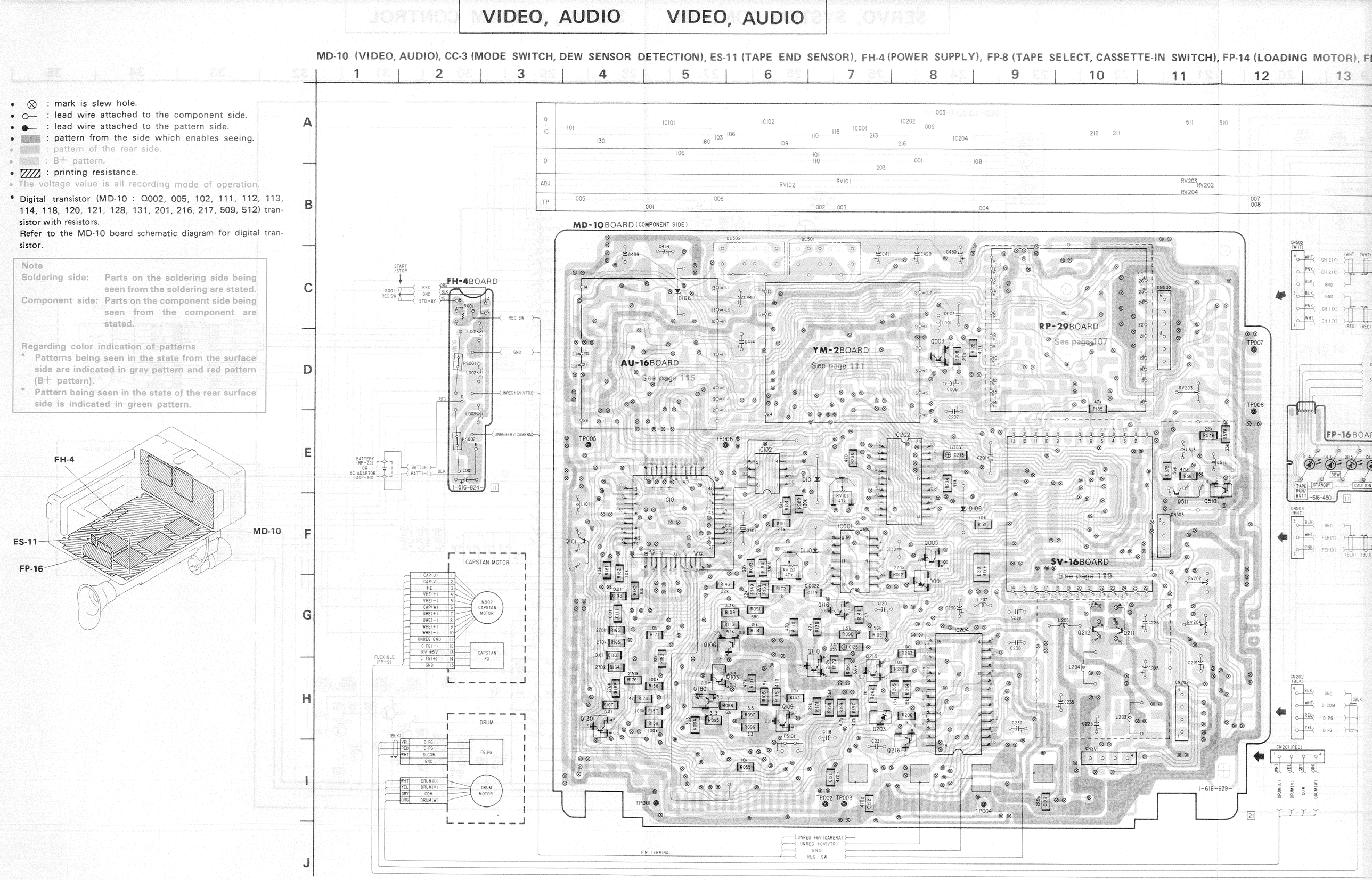

SUPPLY), FP-8 (TAPE SELECT, CASSETTE-IN SWITCH), FP-14 (LOADING MOTOR), FP-16 (LED) PRINTED WIRING BOARDS

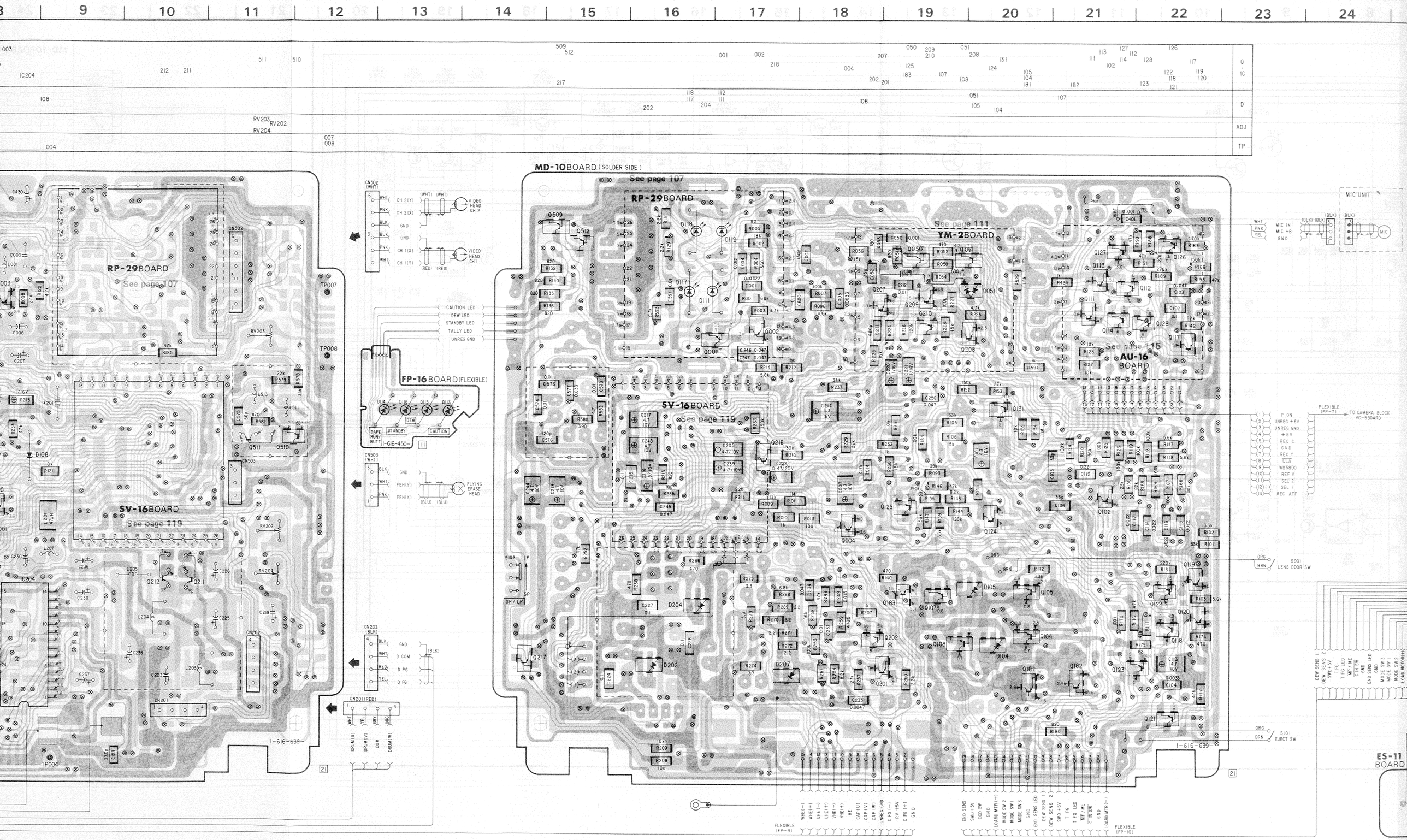

RDS

16 17 18 19 20 21 22 23 24 25 26 27 28 29 30 31

Q IC
D
ADJ
TP

(SIDE)

See page 107

RP-29 BOARD

See page 111

YM-2 BOARD

See page 115

AU-16 BOARD

SV-16 BOARD

See page 119

MIC UNIT

WHT MIC IN
PNK MIC +B
YEL GND

(BLK) (BLK) (BLK)

FLEXIBLE (FP-7) → TO CAMERA BLOCK VC-5 BOARD

(1) P ON
(2) UNREG +6V
(3) UNREG GND
(4) +5V
(5) REC C
(6) GND
(7) REC Y
(8) LLA
(9) WB5800
(10) REF V
(11) SEL 2
(12) SEL 1
(13) REC ATF

ORG BRN S901 LENS DOOR SW

ORG BRN S101 EJECT SW

1-616-639- 21

FLEXIBLE (FP-9)

WHE(-) WHE(+) UHE(-) UHE(+) VHE(-) VHE(+) HE CAP(U) CAP(V) CAP(W) UNREG GND C FG(-) RV +5V C FG(+) GND

END SENS SWD+5V CCD SW GND LOAD MTR(+) MODE SW 2 MODE SW 1 MODE SW 3 GND END SENS LED DEW SENS 1 DEW SENS 2 SWD+5V T FG T FG LED WP/ AWE C IN SW GND LOAD MTR(-)

FLEXIBLE (FP-10)

FP-8 BOARD (FLEXIBLE)

1-616-446- 11

S001 CASETTE IN SW
TAPE SELECT SW
D002
D001

END SENS LED GND SWD+5V T FG T FG LED WP/ AWE C IN SW

CC-3 BOARD

DEW SENSOR

MODE SW

1-616-614- 12

DEW SENS 1 DEW SENS 2 SWD+5V T FG T FG LED WP/ AWE C IN SW GND END SENS LED GND MODE SW 3 MODE SW 1 MODE SW 2 LOAD MOTOR(+) GND LOAD MOTOR(-) GND CCD SW SWD+5V END SENS

Q001 ES-11 BOARD

END SENS RV001

SWD+5V CCD SW GND

S902 CCD SW

BRN WHT BLK

FP-14 BOARD (FLEXIBLE)

M901 LOADING MOTOR C001

LOAD MOTOR(+) LOAD MOTOR(-)

1-616-449- 11

BRN SWD+5V
ORG END SENS

1-616-466- 11

SERVO, SYSTEM CONTROL SERVO, SYSTEM CONT

MD-10 (SERVO, SYSTEM CONTROL), CC-3 (MODE SWITCH, DEW SENSOR DETECTION), ES-11 (TAPE END SENSOR), FH-4 (POWER SUPPLY), FP-8 (TAPE SELECT, CASSETTE-IN SWITCH), FP-14 (LOADING MOTOR), FP-16 (LED) SCHEMATIC DIAGRAMS

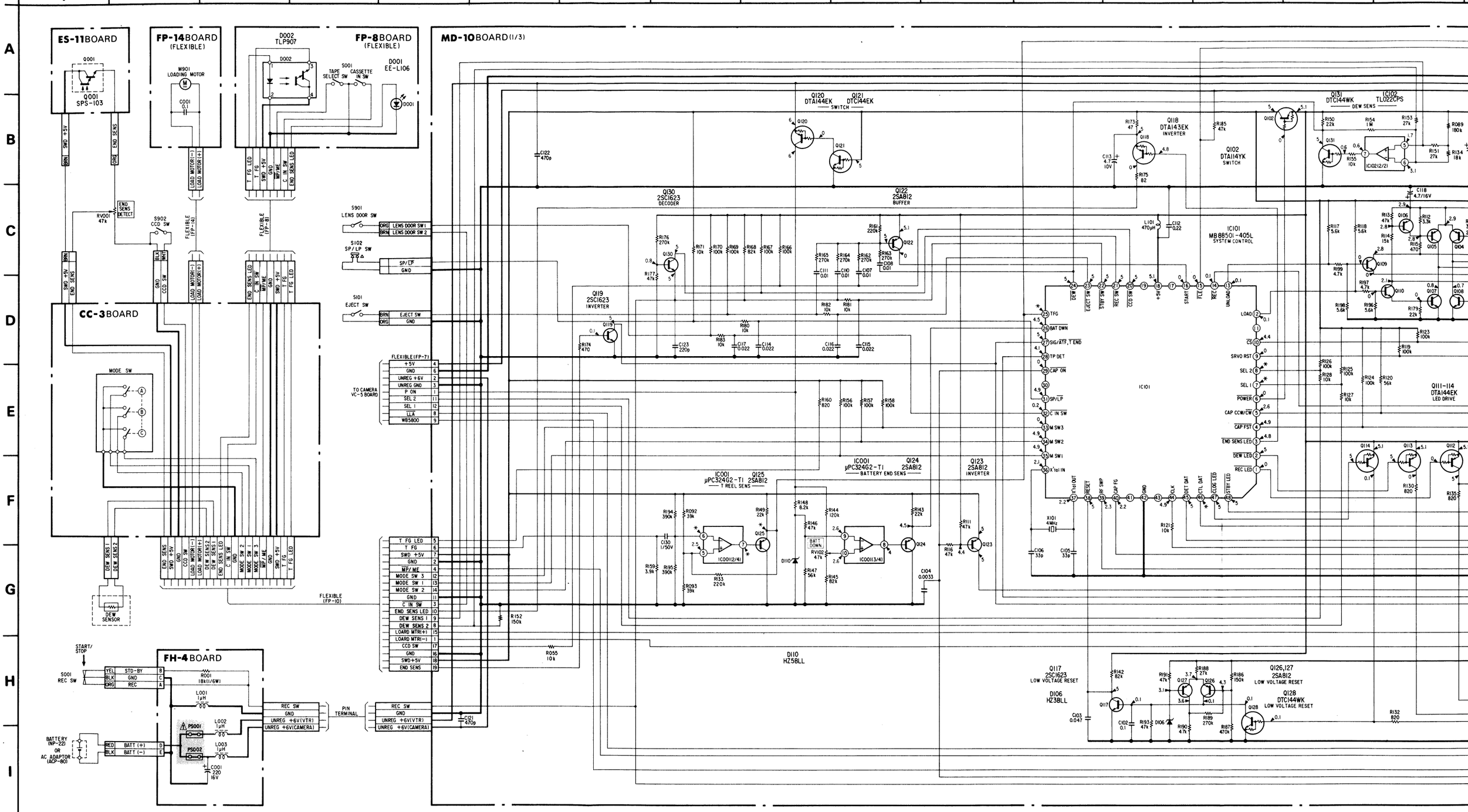

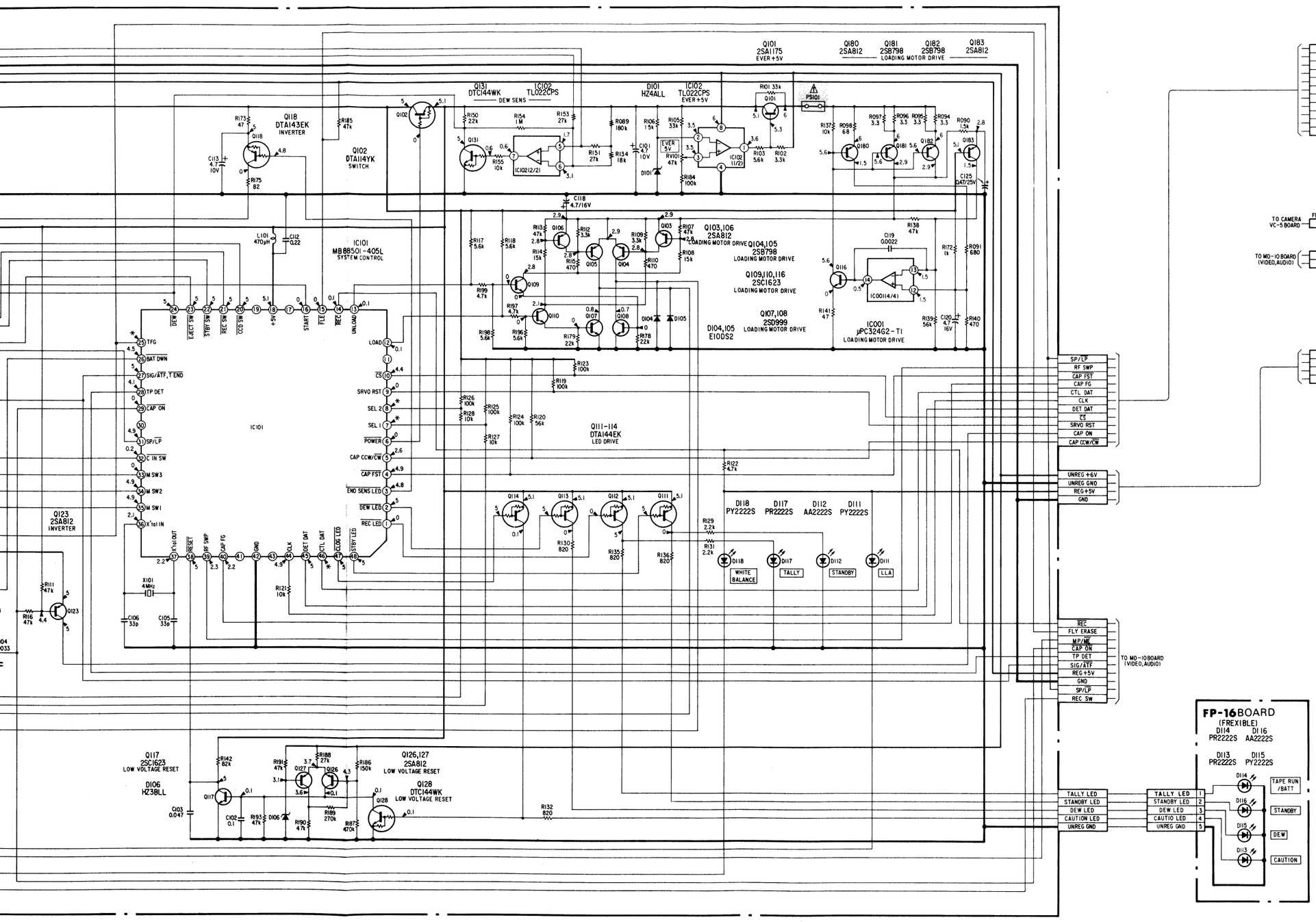
11 12 13 14 15 16 17 18 19 20 21 22 23 24 25 26 27
IC101 MB88501-405L SYSTEM CONTROL
Q118 DTA143EK INVERTER
Q102 DTA114YK SWITCH
Q131 DTC144WK DEW SENS
IC102 TL022CPS
D101 HZ4ALL
Q101 2SA1175 EVER+5V
Q180 2SA812
Q181 2SB798
Q182 2SB798
Q183 2SA812
LOADING MOTOR DRIVE
PS101
Q103,106 2SA812 LOADING MOTOR DRIVE
Q104,105 2SB798 LOADING MOTOR DRIVE
Q109,110,116 2SC1623 LOADING MOTOR DRIVE
Q107,108 2SD999 LOADING MOTOR DRIVE
D104,105 E10DS2
IC001 μPC324G2-T1 LOADING MOTOR DRIVE
Q111-114 DTA144EK LED DRIVE
D118 PY2222S WHITE BALANCE
D117 PR2222S TALLY
D112 AA2222S STANDBY
D111 PY2222S LLA
Q123 2SA812 INVERTER
Q117 2SC1623 LOW VOLTAGE RESET
Q126,127 2SA812 LOW VOLTAGE RESET
Q128 DTC144WK LOW VOLTAGE RESET
D106 HZ3BLL
SP/LP
RF SWP
CAP FST
CAP FG
CTL DAT
CLK
DET DAT
CS
SRVO RST
CAP ON
CAP CCW/CW
UNREG +6V
UNREG GND
REG+5V
GND
REC
FLY ERASE
MP/ME
TP DET
SIG/ATF
REC SW
TALLY LED
STANDBY LED
DEW LED
CAUTION LED
TO MD-10BOARD (VIDEO,AUDIO)
FP-16BOARD (FREXIBLE)
D114 PR2222S
D116 AA2222S
D113 PR2222S
D115 PY2222S
TAPE RUN /BATT
STANDBY
DEW
CAUTION
MD-10BOARD (1/3)
TO CAMERA VC-5 BOARD
FLEXIBLE(FP-7)
REF V
TO MD-10BOARD (VIDEO,AUDIO)
Q217 DTC144EK SP/LP SW
LP DC BIAS
SW POSITION
Q216 DTC144EK CAP CW/CCW SW
Q201 SWITCH
Q213 2SC1623 PROTECTOR
Q202 2SA812 EMERGENCY DETECT
D207 E10QS03
D203 IS2835
D108 RD12EBI
IC202 CX20114 DRUM MOTOR DRIVE
D202 E10QS03
D204 E10QS03
Q211 2SA1385 PWM POWER DRIVE
Q212 2SA1385 PWM POWER DRIVE

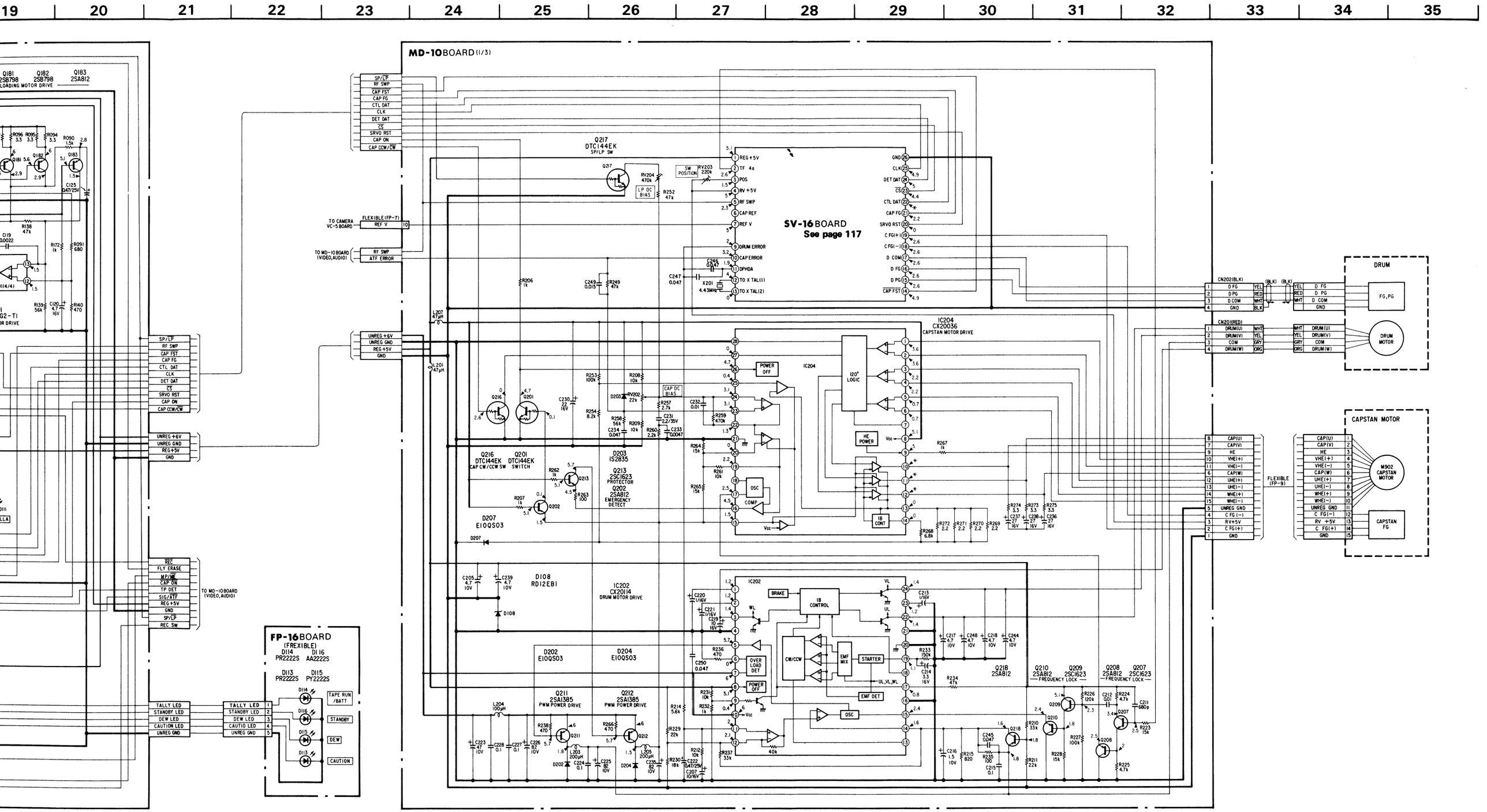
19
20
21
22
23
24
25
26
27
28
29
30
31
32
33
34
35
MD-10BOARD (1/3)
SV-16BOARD
See page 117
FP-16BOARD
(FREXIBLE)
DRUM
FG,PG
DRUM MOTOR
CAPSTAN MOTOR
M902 CAPSTAN MOTOR
CAPSTAN FG
IC204
CX20036
CAPSTAN MOTOR DRIVE
IC202
CX20114
DRUM MOTOR DRIVE
Q217
DTC144EK
SP/LP SW
Q216
DTC144EK
CAP CW/CCW SW
Q201
DTC144EK
SWITCH
Q213
2SC1623
PROTECTOR
Q202
2SA812
EMERGENCY DETECT
D203
1S2835
D207
E10QS03
D108
RD12EB1
D202
E10QS03
D204
E10QS03
Q211
2SA1385
PWM POWER DRIVE
Q212
2SA1385
PWM POWER DRIVE
Q218
2SA812
Q210
2SA812
FREQUENCY LOCK
Q209
2SC1623
Q208
2SA812
FREQUENCY LOCK
Q207
2SC1623
TO CAMERA VC-5 BOARD
TO MD-10 BOARD (VIDEO,AUDIO)
FLEXIBLE (FP-7)
FLEXIBLE (FP-9)
TALLY LED
STANDBY LED
DEW LED
CAUTION LED
UNREG GND
TAPE RUN /BATT
STANDBY
DEW
CAUTION

MD-10 (SERVO, SYSTEM COUTROL), CC-3 (MODE SWITCH, DEW SENSOR DETECTION), ES-11 (TAPE EVD SENSOR), FH-4 (POWER SUPPLY), FP-8 (TAPE SELECT, CASSETTE-IN SWITCH), FP-14 (LOADIN

- Caution to be exercised when replacing chip components Do not reuse the removed components but use new components.
  Caution should be taken as the negative side of the tantalum capacitor is weak toward heat.
- All capacitors which resistance pressure 50V or less are not indicated except for chemicals and tantalums. The unit is all μF (p is pF).
- All resistors are in ohms, 1/10W in chip resistance; 1/32W in printing resistance.
  kΩ =1000Ω and MΩ =1000kΩ
- All variable and adjustable resistors have characteristics curve B, which definition is omitted.

Note (SCHEMATIC DIAGRAM) :

- ▭ : panel designation.
- ▭ : adjustment designation.
- ▬ : B+ line.
- Measuring conditions of voltage value and waveform
  (1) The subject is color bar of pattern box.
  (2) The voltage value is a reference value between the grounding.
  (The tester used is the digital multimeter DC10MΩ)
  (3) The voltage value are all in the recording mode of operation.

Note: The components identified by shading and mark ⚠ are critical for safety. Replace only with part number specified.

Note: Les composants identifiés par un tramé et une marque ⚠ sont critiques pour la sécurité. Ne les remplacer que par une piece portant le numéro spécifié.

Note (PRINTED WIRING BOARD) :

- ⊗ : mark is slew hole.
- ○— : lead wire attached to the component side.
- ●— : lead wire attached to the pattern side.
- ▓ : pattern from the side which enables seeing.
- ▒ : pattern of the rear side.
- ▒ : B+ pattern.
- ▨ : printing resistance.
- The voltage value is all recording mode of operation.

Note
Soldering side: Parts on the soldering side being seen from the soldering are stated.
Component side: Parts on the component side being seen from the component are stated.

Regarding color indication of patterns
* Patterns being seen in the state from the surface side are indicated in gray pattern and red pattern (B+ pattern).
* Pattern being seen in the state of the rear surface side is indicated in green pattern.

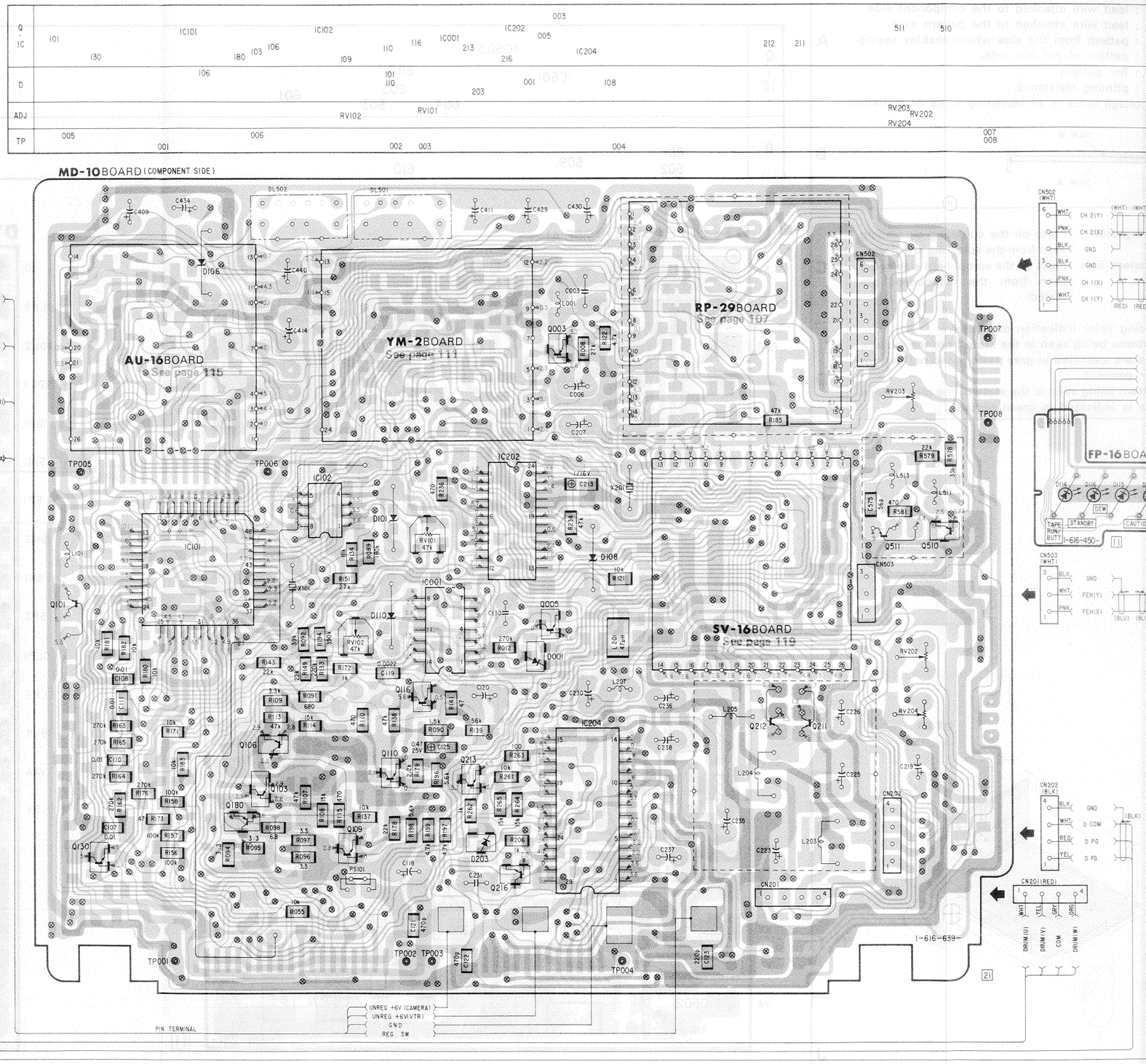

E SELECT, CASSETTE-IN SWITCH), FP-14 (LOADING MOTOR), FP-16 (LED) PRINTED WIRING BOARDS

11 12 13 14 15 16 17 18 19 20 21 22 23 24 25 26

Q IC
D
ADJ
TP

MD-10 BOARD (SOLDER SIDE)

See page 107

RP-29 BOARD

See page 111

YM-2 BOARD

See page 115

AU-16 BOARD

SV-16 BOARD

See page 119

FP-16 BOARD (FLEXIBLE)

FP-8 BOARD (FLEXIBLE)

CC-3 BOARD

ES-11 BOARD

MIC UNIT

CN502 (WHT)
CH 2 (Y)
CH 2 (X)
GND
CH 1 (X)
CH 1 (Y)
VIDEO HEAD CH 2
VIDEO HEAD CH 1

CAUTION LED
DEW LED
STANDBY LED
TALLY LED
UNREG GND

CN503 (WHT)
GND
FEH (Y)
FEH (X)
FLYING ERASE HEAD

CN202 (BLK)
GND
D COM
D PG
D FG

CN201 (RED)
DRUM (U)
DRUM (V)
COM
DRUM (W)

I-616-639-
I-616-450-
I-616-446-
I-616-466-

S102 LP SP

FLEXIBLE (FP-9)
FLEXIBLE (FP-10)
FLEXIBLE (FP-7)
TO CAMERA BLOCK VC-5BOARD

S901 LENS DOOR SW
S101 EJECT SW

SERVO, SYSTEM CONTROL

WIRING BOARDS

	16	17	18	19	20	21	22
Q · IC		001 002 218	004 207 202 201	050 125 183 209 210 107 051 208 108	131 124 105 104 181	182 111 113 127 114 102 112	128 126 123 122 118 121 117 119 120
D	202 118 117 204	112 111	108	051 105	104	107	
ADJ							
TP							

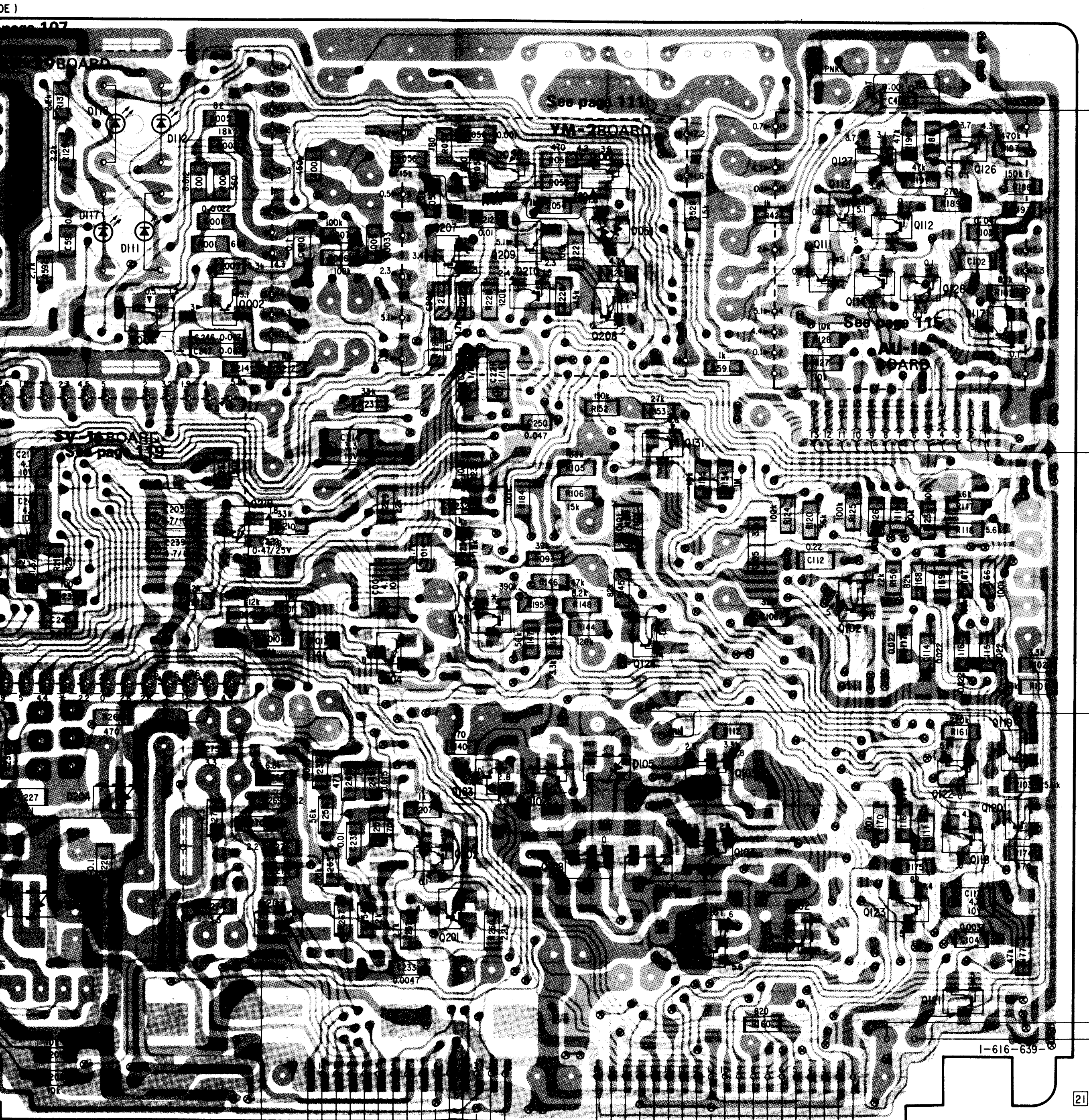

WHT PNK YEL — MIC IN, MIC +B, GND

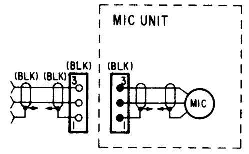

Pin	Signal
1	P ON
2	UNREG +6V
3	UNREG GND
4	+5V
5	REC C
6	GND
7	REC Y
8	LLA
9	WB5800
10	REF V
11	SEL 2
12	SEL 1
13	REC ATF

FLEXIBLE (FP-7) → TO CAMERA BLOCK VC-5BOARD

ORG BRN S901 LENS DOOR SW

ORG BRN S101 EJECT SW

FP-8 BOARD (FLEXIBLE)

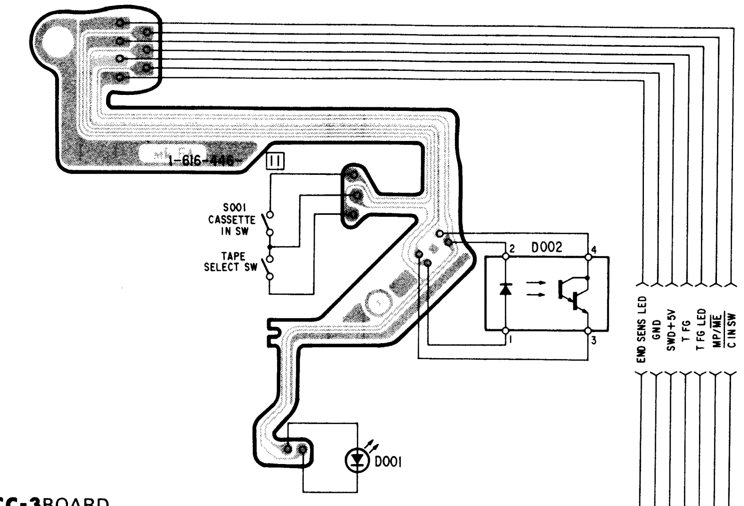

CC-3 BOARD

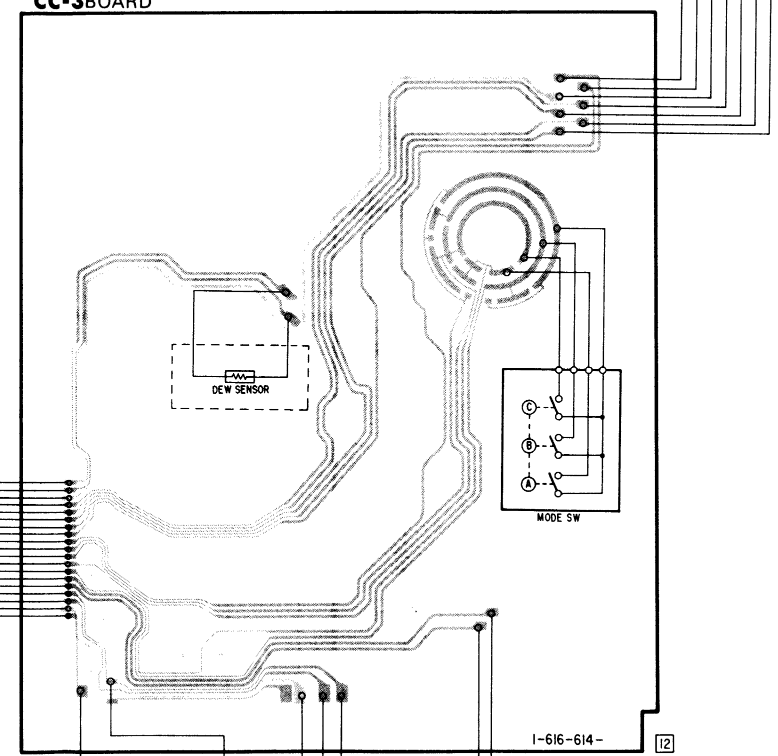

ES-11 BOARD

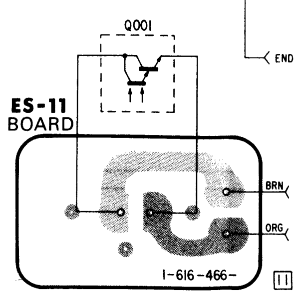

FP-14 BOARD (FLEXIBLE)

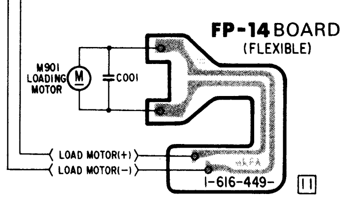

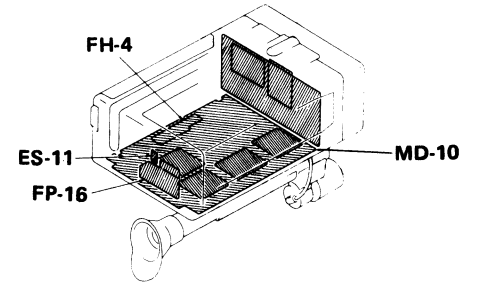

- Caution to be exercised when replacing chip components Do not reuse the removed components but use new components.
  Caution should be taken as the negative side of the tantalum capacitor is weak toward heat.
- All capacitors which resistance pressure 50V or less are not indicated except for chemicals and tantalums. The unit is all μF (p is pF).
- All resistors are in ohms, 1/10W in chip resistance; 1/32W in printing resistance.
  kΩ =1000Ω and MΩ =1000kΩ
- All variable and adjustable resistors have characteristics curve B, which definition is omitted.
- ▭ : printing resistor.
- ▭ : panel designation.
- ▭ : adjustment designation.
- ▬ : B+ line.
- Measuring conditions of voltage value and waveform
  (1) The subject is color bar of pattern box.
  (2) The voltage value is a reference value between the grounding.
  (The tester used is the digital multimeter DC10MΩ)
  (3) The voltage value are all in the recording mode of operation.

DT-60 (CCD DRIVE, TIMING GENERATOR) SCHEMATIC DIAGRAM

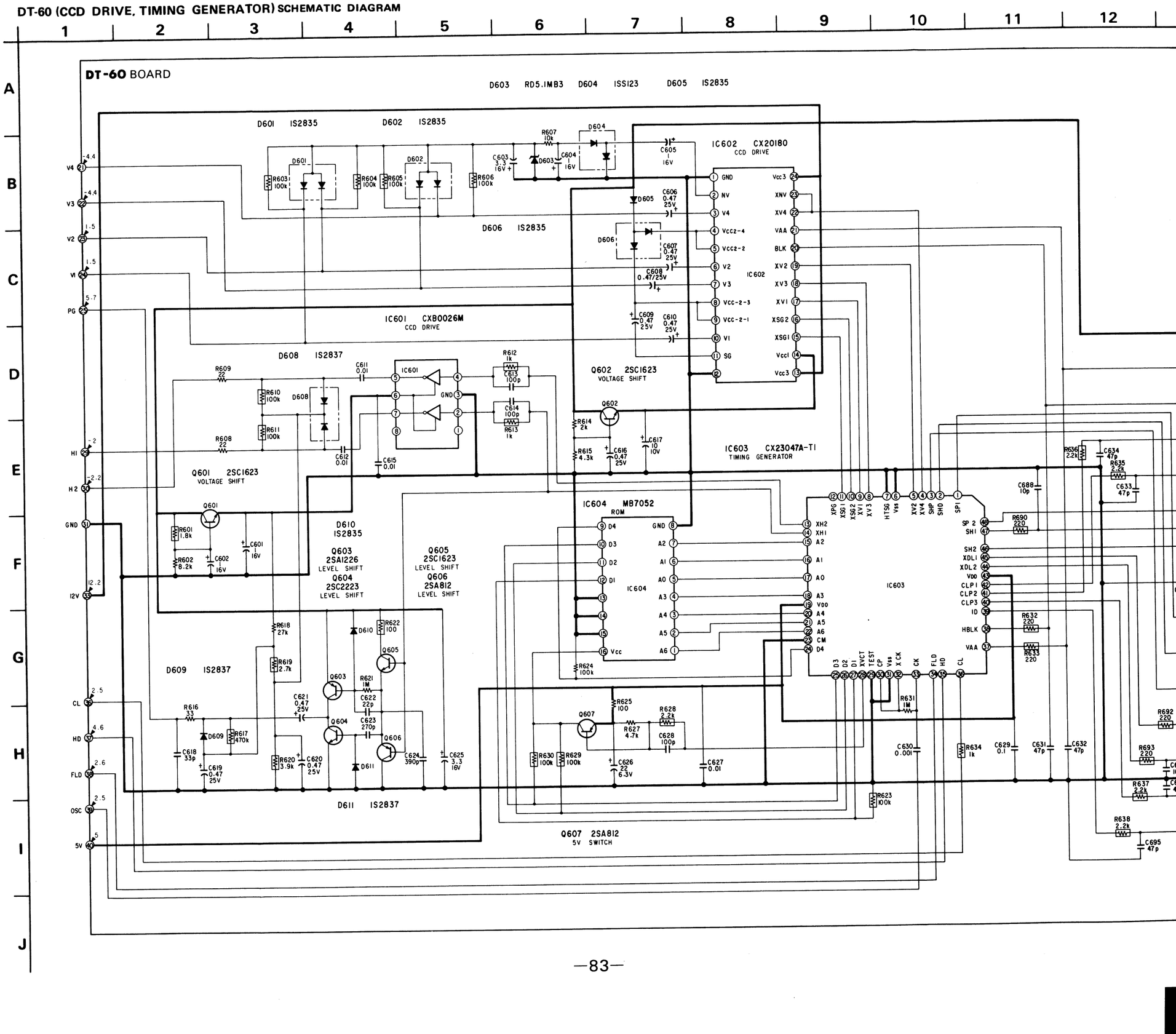

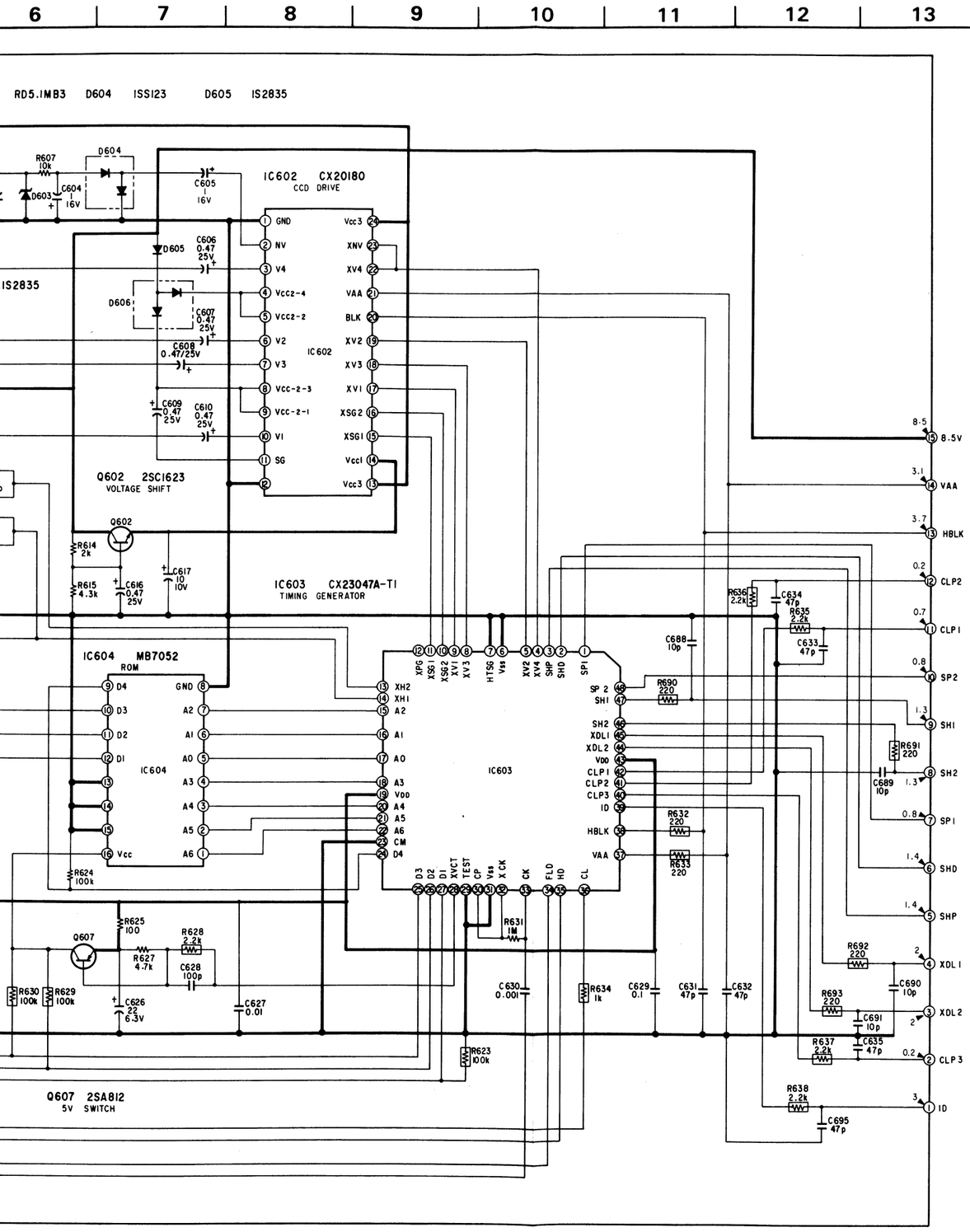

- ⊗ : mark is slew hole.
- ○— : lead wire attached to the component side.
- ●— : lead wire attached to the pattern side.
- ▬ : pattern from the side which enables seeing.
- ▬ : pattern of the rear side.
- ▬ : B+ pattern.
- ▨ : printing resistance.
- The voltage value is all recording mode of operation.

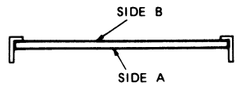

Note

Soldering side: Parts on the soldering side being seen from the soldering are stated.

Component side: Parts on the component side being seen from the component are stated.

Regarding color indication of patterns

* Patterns being seen in the state from the surface side are indicated in gray pattern and red pattern (B+ pattern).
* Pattern being seen in the state of the rear surface side is indicated in green pattern.

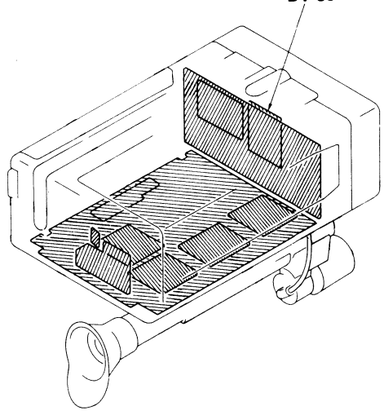

1 2 3 4

A B C D E F G H I J

Q, IC	IC603, IC601, 606, 605, 604, 603
D	601, 602, 609, 610

DT-60 BOARD (SIDE A)

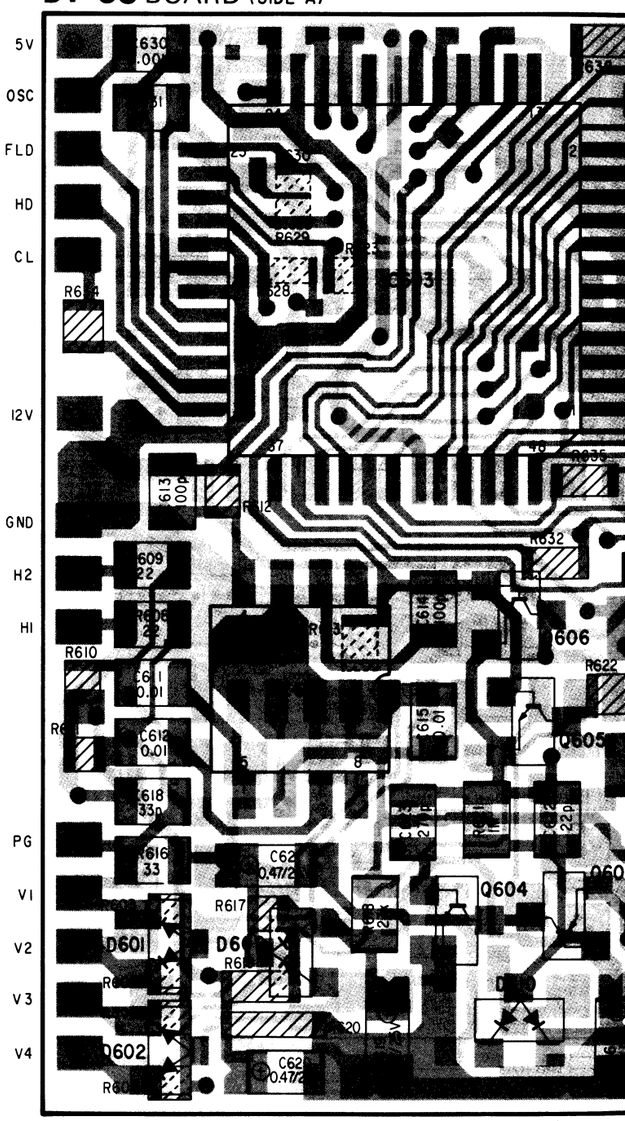

DT-60 (CCD DRIVE, TIMING GENERATOR) PRINTED WIRING BOARD

⊗ : mark is slew hole.
— : lead wire attached to the component side.
— : lead wire attached to the pattern side.
▓ : pattern from the side which enables seeing.
▓ : pattern of the rear side.
▓ : B+ pattern.
▨ : printing resistance.
e voltage value is all recording mode of operation.

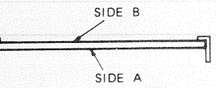

te
dering side: Parts on the soldering side being seen from the soldering are stated.
nponent side: Parts on the component side being seen from the component are stated.

garding color indication of patterns
Patterns being seen in the state from the surface side are indicated in gray pattern and red pattern (B+ pattern).
Pattern being seen in the state of the rear surface side is indicated in green pattern.

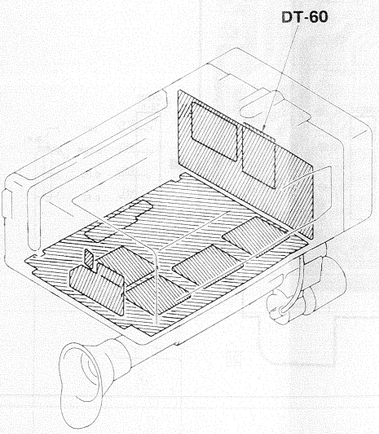

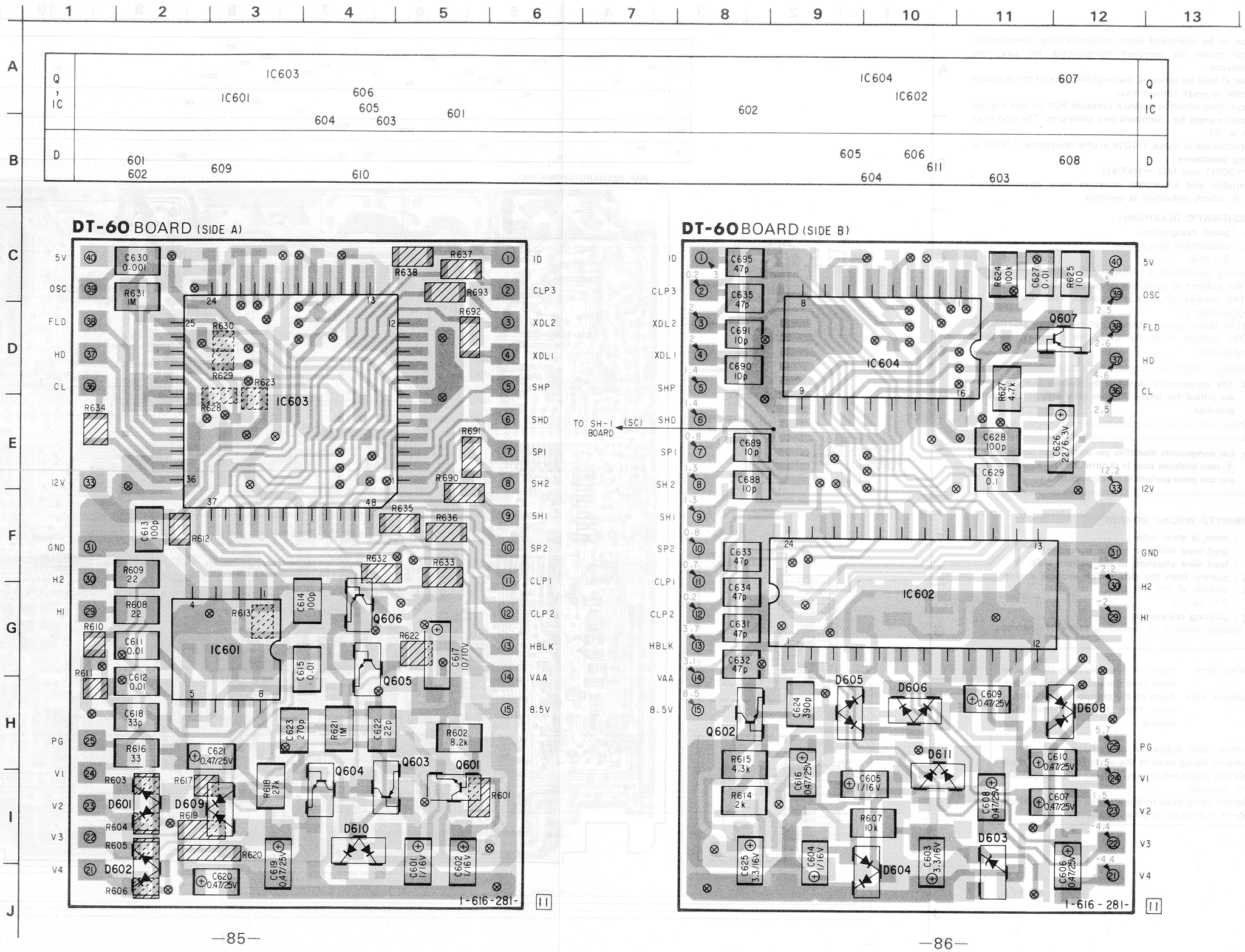

SH-1 (PROCESS) SCHEMATIC DIAGRAM

- Caution to be exercised when replacing chip components
  Do not reuse the removed components but use new components.
  Caution should be taken as the negative side of the tantalum capacitor is weak toward heat.
- All capacitors which resistance pressure 50V or less are not indicated except for chemicals and tantalums. The unit is all μF (p is pF).
- All resistors are in ohms, 1/10W in chip resistance; 1/32W in printing resistance.
  kΩ =1000Ω and MΩ =1000kΩ
- All variable and adjustable resistors have characteristics curve B, which definition is omitted.
- : printing resistor.
- : panel designation.
- : adjustment designation.
- : B+ line.
- Measuring conditions of voltage value and waveform
  (1) The subject is color bar of pattern box.
  (2) The voltage value is a reference value between the grounding.
  (The tester used is the digital multimeter DC10MΩ)
  (3) The voltage value are all in the recording mode of operation.

Signal path

: REC Y/C Signal

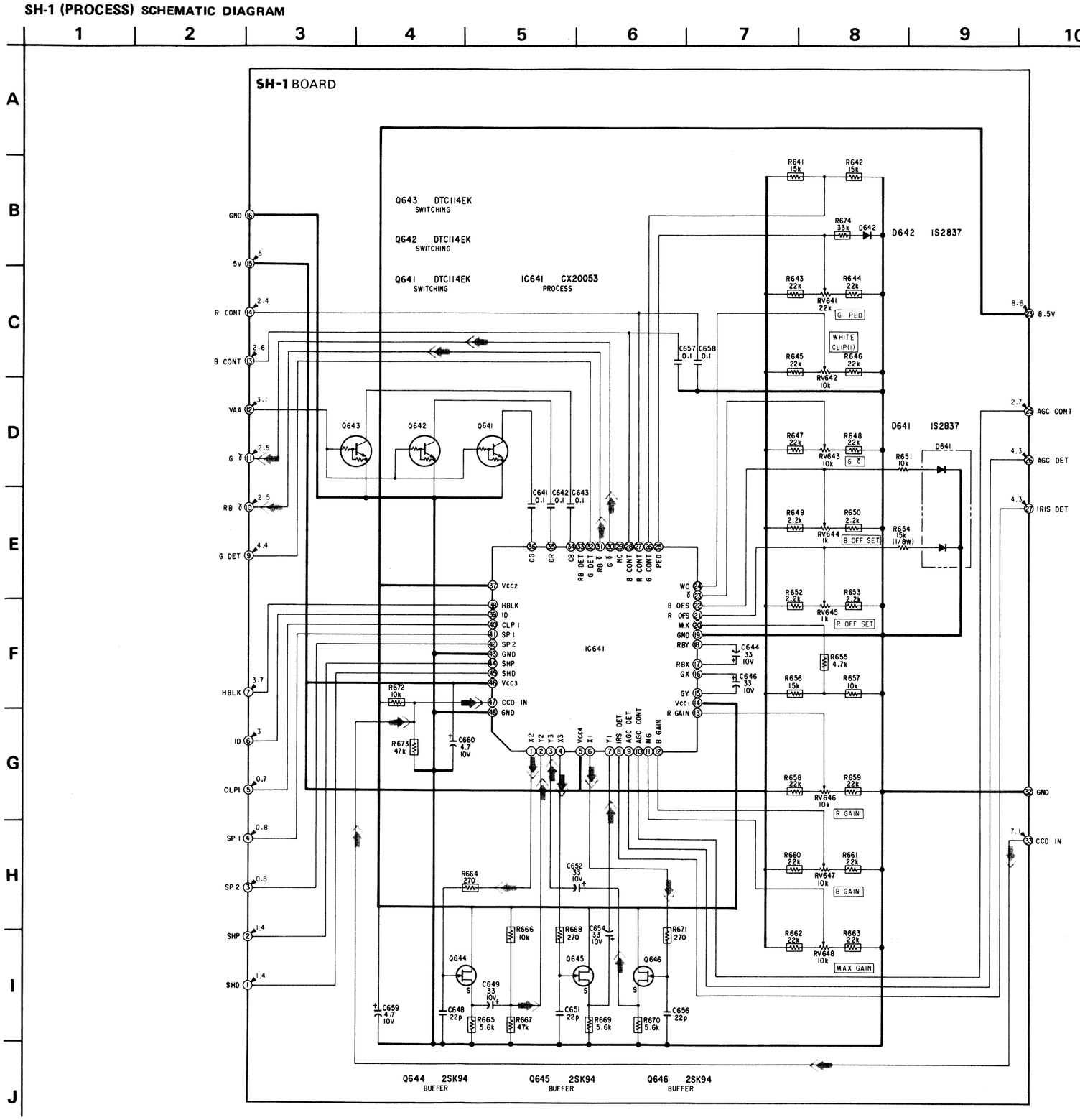

SH-1 (PROCESS) PRINTED WIRING BOARD

- ⊗ : mark is slew hole.
- ○— : lead wire attached to the component side.
- ●— : lead wire attached to the pattern side.
- ▓▓ : pattern from the side which enables seeing.
- ▒▒ : pattern of the rear side.
- ▒▒ : B+ pattern.
- ▨ : printing resistance.
- The voltage value is all recording mode of operation.
- Digital transistor (SH-1: Q641, 642, 643) transistor with resistors. Refer to the SH-1 board schematic diagram for digital transistor.

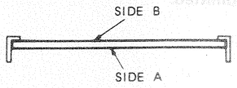

Note

Soldering side: Parts on the soldering side being seen from the soldering are stated.

Component side: Parts on the component side being seen from the component are stated.

Regarding color indication of patterns

* Patterns being seen in the state from the surface side are indicated in gray pattern and red pattern (B+ pattern).
* Pattern being seen in the state of the rear surface side is indicated in green pattern.

SH-1

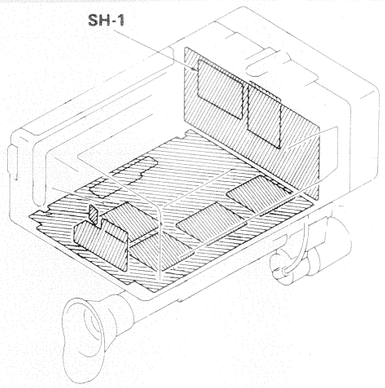

SH-1 BOARD (SIDE A)

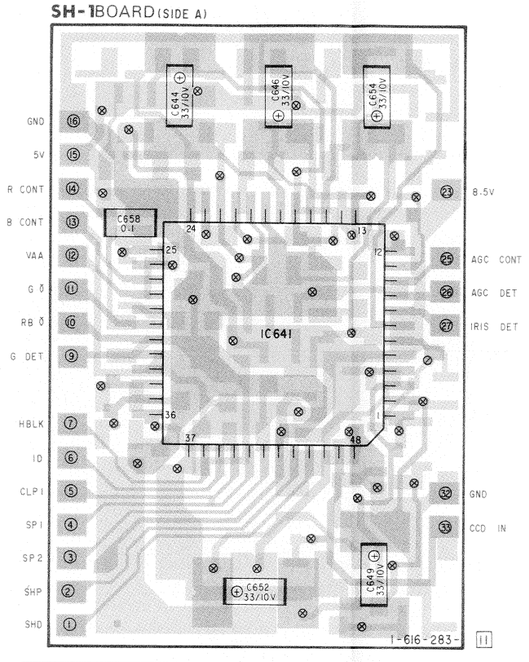

Q · IC	642 643	IC641 641	644 646 645	Q · IC
D	642		641	D
ADJ	RV641 RV642	RV643 RV644	RV645 RV646 RV647 RV648	ADJ

SH-1 BOARD (SIDE B)

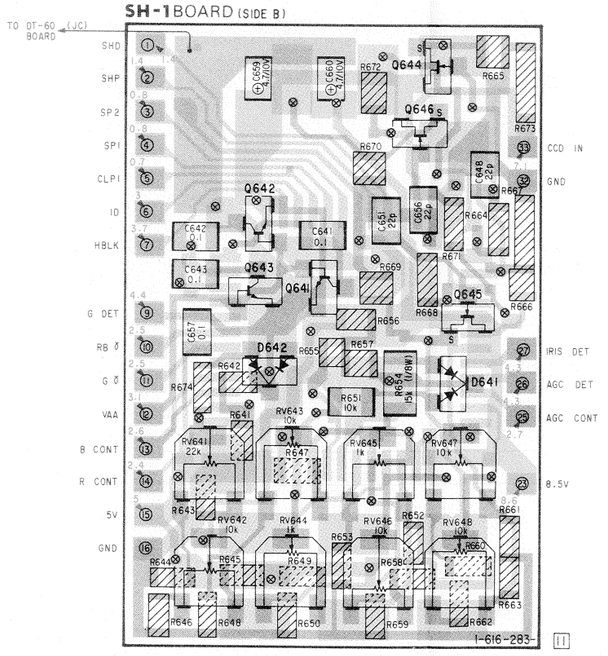

- Caution to be exercised when replacing chip components Do not reuse the removed components but use new components.
  Caution should be taken as the negative side of the tantalum capacitor is weak toward heat.
- All capacitors which resistance pressure 50V or less are not indicated except for chemicals and tantalums. The unit is all μF (p is pF).
- All resistors are in ohms, 1/10W in chip resistance; 1/32W in printing resistance.
  kΩ =1000Ω and MΩ =1000kΩ
- All variable and adjustable resistors have characteristics curve B, which definition is omitted.

Note (SCHEMATIC DIAGRAM) :

- ⊣W⊢ : printing resistor.
- ▭ : panel designation.
- ▭ : adjustment designation.
- ▬ : B+ line.
- Measuring conditions of voltage value and waveform
  (1) The subject is color bar of pattern box.
  (2) The voltage value is a reference value between the grounding.
  (The tester used is the digital multimeter DC10MΩ)
  (3) The voltage value are all in the recording mode of operation.

Signal path

- : REC Y/C Signal
- : REC Y Signal
- : REC C Signal

MX-2 (MATR

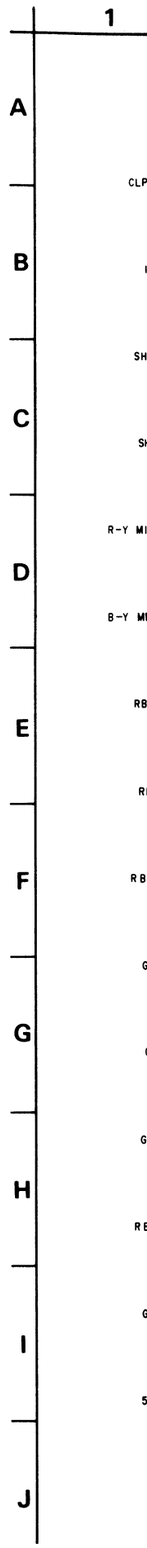

hip components
s but use new

e of the tantalum

V or less are not
ns. The unit is all

stance; 1/32W in

e characteristics

l waveform
ox.
ue between the

eter DC10MΩ)
ording mode of

MX-2 (MATRIX) SCHEMATIC DIAGRAM

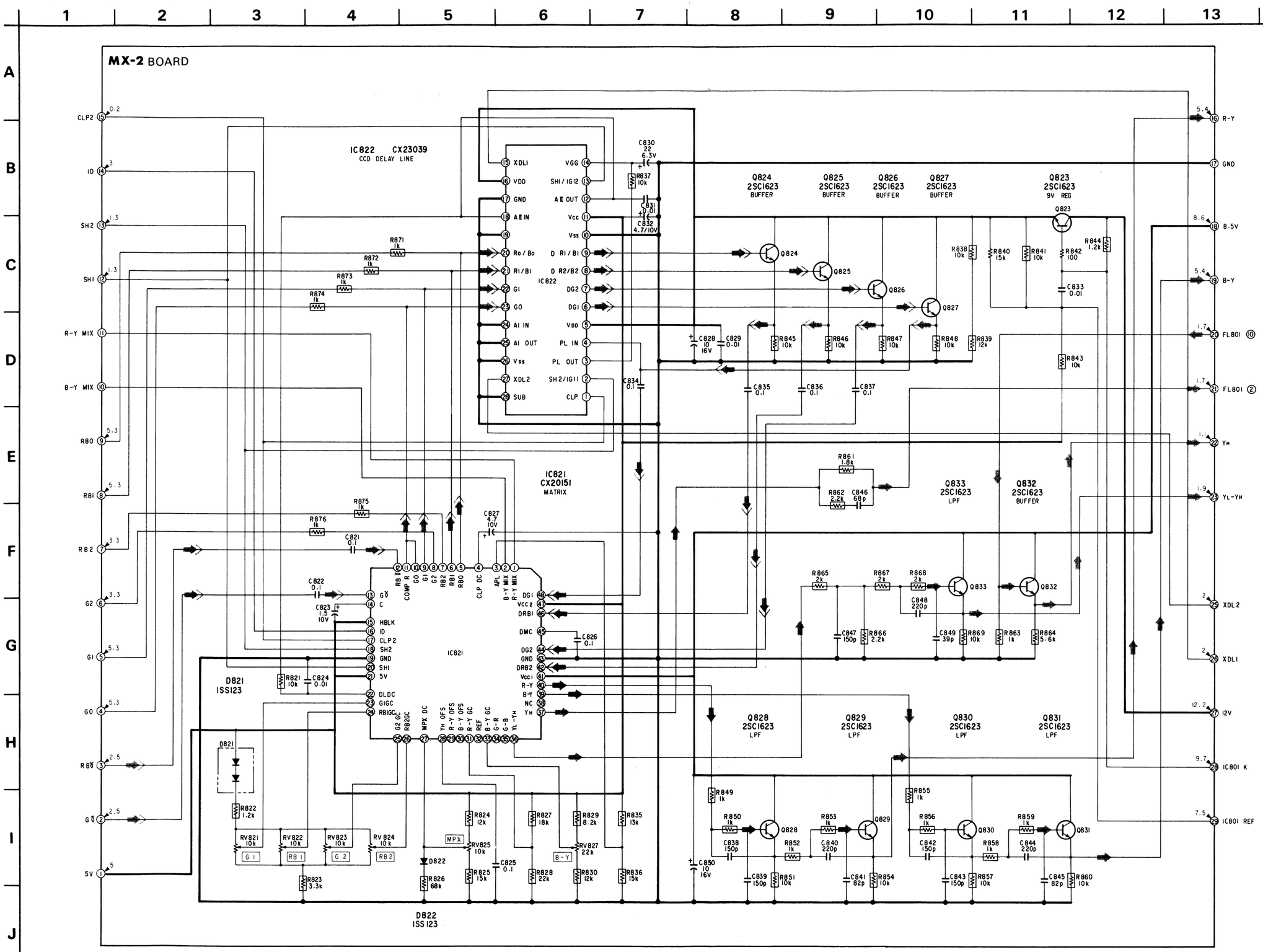

MX-2 (MATRIX) PRINTED WIRING BOARD

- ⊗ : mark is slew hole.
- ○— : lead wire attached to the component side.
- ●— : lead wire attached to the pattern side.
- ▒ : pattern from the side which enables seeing.
- ▒ : pattern of the rear side.
- ▒ : B+ pattern.
- ▨ : printing resistance.
- The voltage value is all recording mode of operation.

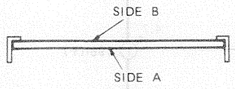

Note

Soldering side: Parts on the soldering side being seen from the soldering are stated.

Component side: Parts on the component side being seen from the component are stated.

Regarding color indication of patterns

* Patterns being seen in the state from the surface side are indicated in gray pattern and red pattern (B+ pattern).
* Pattern being seen in the state of the rear surface side is indicated in green pattern.

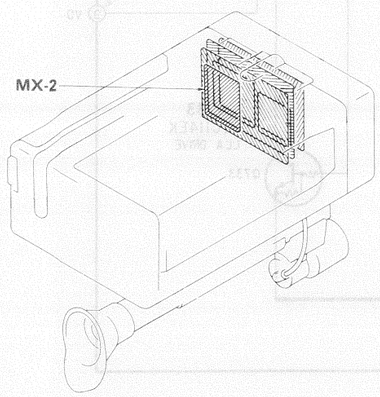

Q , IC	D	ADJ
825		
824 828		
831		
830		
IC821		
823		
		RV821 RV823 RV822 RV824
	821	
	822	RV827 RV825
833 IC822 832		
827 826 829		

Q , IC	D	ADJ

MX-2 BOARD (SIDE A)

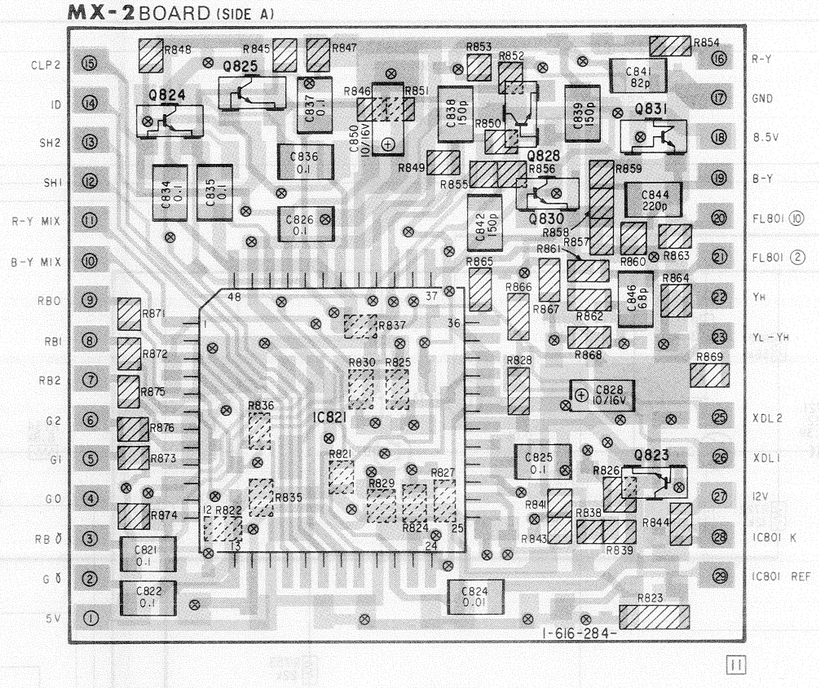

MX-2 BOARD (SIDE B)

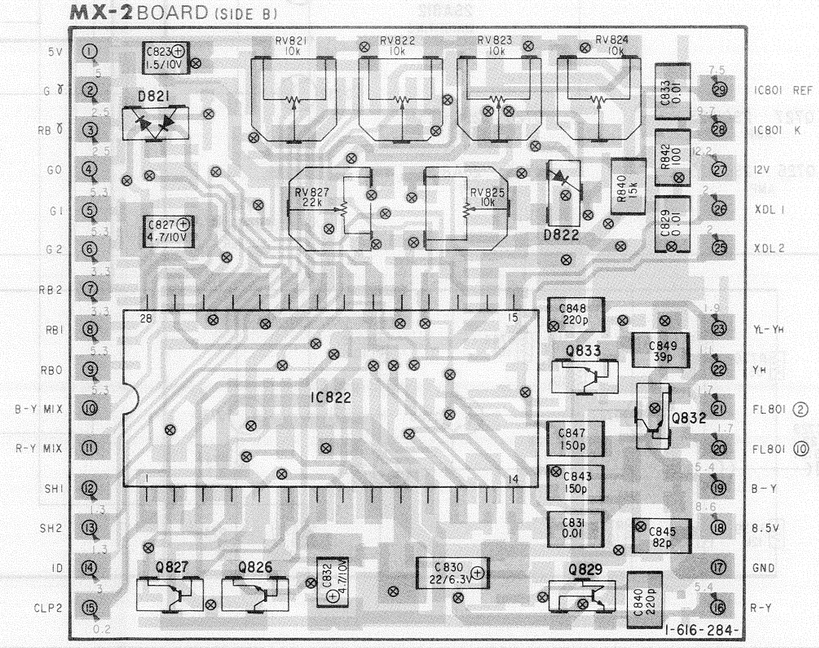

IA-1 (IRIS DETECTION AGC CONTROL) SCHEMATIC DIAGRAM

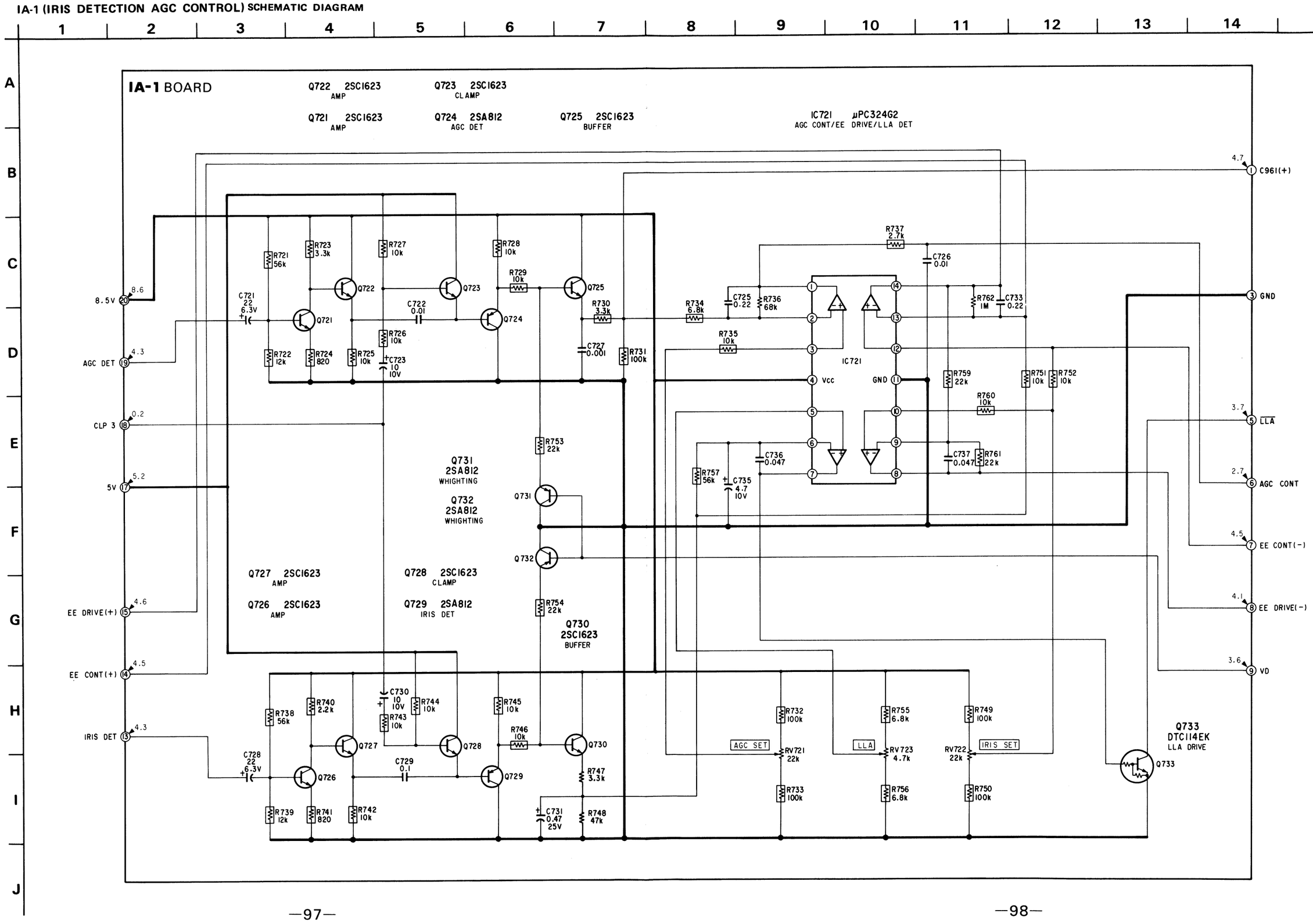

IA-1 (IRIS DETECTION AGC CONTROL) PRINTED WIRING BOARD

- Caution to be exercised when replacing chip components Do not reuse the removed components but use new components.
  Caution should be taken as the negative side of the tantalum capacitor is weak toward heat.
- All capacitors which resistance pressure 50V or less are not indicated except for chemicals and tantalums. The unit is all μF (p is pF).
- All resistors are in ohms, 1/10W in chip resistance; 1/32W in printing resistance.
  kΩ =1000Ω and MΩ =1000kΩ
- All variable and adjustable resistors have characteristics curve B, which definition is omitted.

Note (SCHEMATIC DIAGRAM):

- ─w─ : printing resistor.
- ▭ : panel designation.
- ▭ : adjustment designation.
- ▬ : B+ line.
- Measuring conditions of voltage value and waveform
  (1) The subject is color bar of pattern box.
  (2) The voltage value is a reference value between the grounding.
  (The tester used is the digital multimeter DC10MΩ)
  (3) The voltage value are all in the recording mode of operation.

Note (PRINTED WIRING BOARD):

- ⊗ : mark is slew hole.
- ○— : lead wire attached to the component side.
- ●— : lead wire attached to the pattern side.
- ▓ : pattern from the side which enables seeing.
- ▓ : pattern of the rear side.
- ▓ : B+ pattern.
- ▨ : printing resistance.
- The voltage value is all recording mode of operation.
- Digital transistor (IA-1 : Q733)transistor with resistor.
  Refer to the IA-1 board schematic diagram for digital transistor.

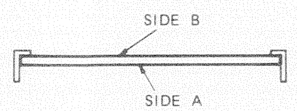

Note
Soldering side: Parts on the soldering side being seen from the soldering are stated.
Component side: Parts on the component side being seen from the component are stated.

Regarding color indication of patterns
* Patterns being seen in the state from the surface side are indicated in gray pattern and red pattern (B+ pattern).
* Pattern being seen in the state of the rear surface side is indicated in green pattern.

IA-1 BOARD (SIDE A)

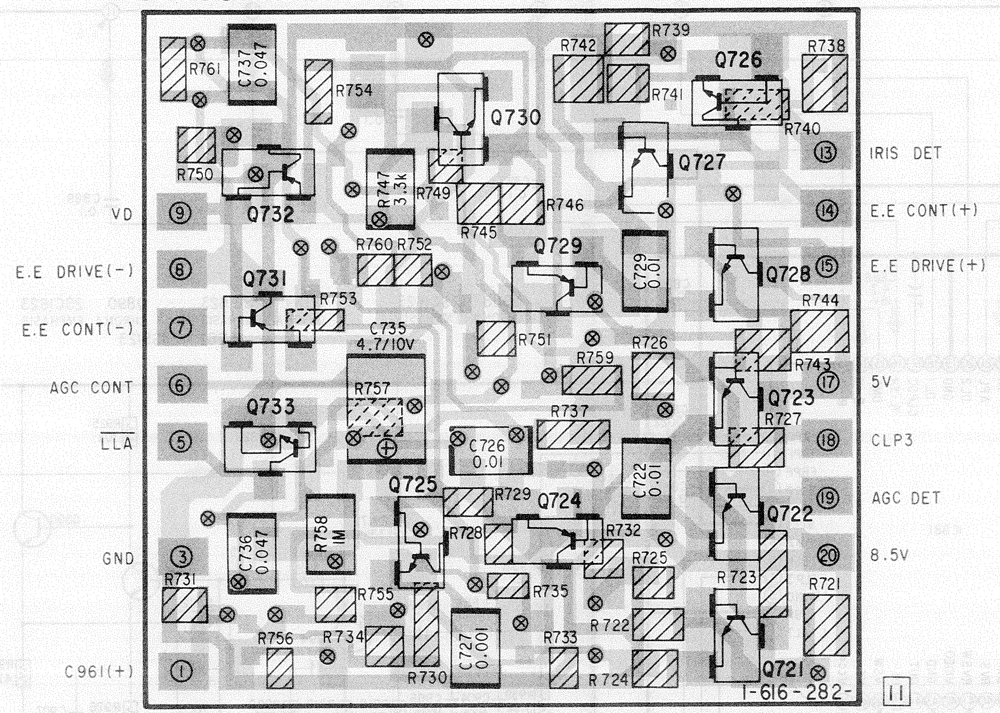

Q · IC	732 731 733	725 IC721	730	729 724	727	726 728 723 722 721	Q · IC
ADJ	RV723 RV722			RV721			ADJ

IA-1 BOARD (SIDE B)

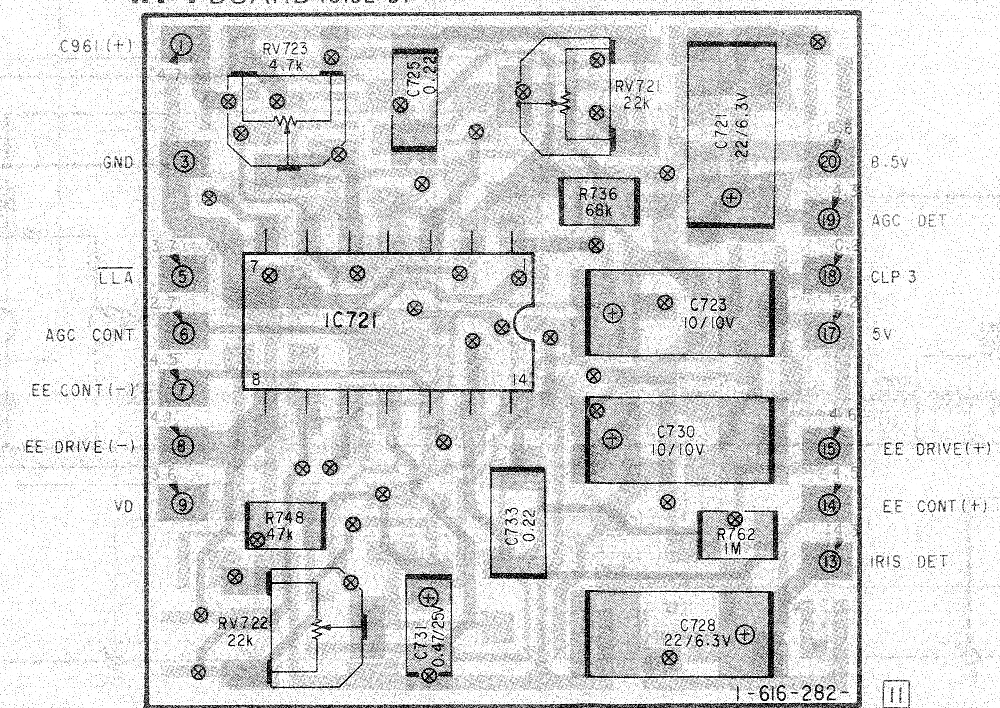

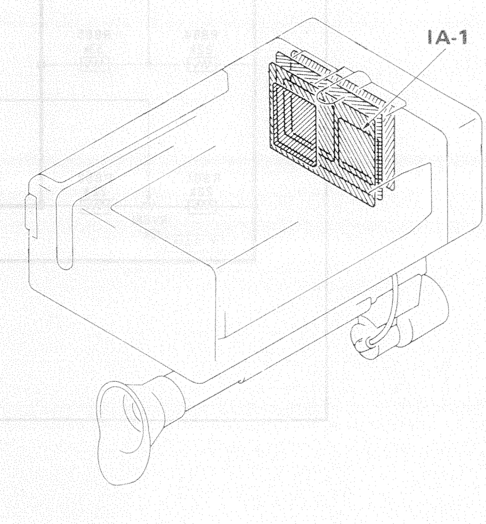

ED-11 (ENCODER) SCHEMATIC DIAGRAM

ED-11 BOARD

IC881 CX20055 ENCODER

D881 ISSI23

Q881 2SC1623 Y/SYNC MIX
Q882 2SC1623 BUFFER
Q883 2SC1623 CLAMP
Q884 2SA812 BUFFER
Q885 2SA812 WHITE CLIP
Q886 2SC1623 WHITE CLIP
Q887 2SC1623 BUFFER
Q888 2SC1623 CHROMA EMPHASIS
Q889 2SC1623 CHROMA EMPHASIS
Q890 2SC1623 CHROMA EMPHASIS
Q891 2SC1623 BUFFER
Q892 2SA812 BUFFER
Q893 2SC1623 BF BUFFER

Signal path
: REC Y Signal
: REC C Signal

ED-11 (ENCODER) PRINTED WIRING BOARD

- Caution to be exercised when replacing chip components
  Do not reuse the removed components but use new components.
  Caution should be taken as the negative side of the tantalum capacitor is weak toward heat.
- All capacitors which resistance pressure 50V or less are not indicated except for chemicals and tantalums. The unit is all μF (p is pF).
- All resistors are in ohms, 1/10W in chip resistance; 1/32W in printing resistance.
  kΩ =1000Ω and MΩ =1000kΩ
- All variable and adjustable resistors have characteristics curve B, which definition is omitted.

Note (SCHEMATIC DIAGRAM) :

- : printing resistor.
- : panel designation.
- : adjustment designation.
- : B+ line.
- Measuring conditions of voltage value and waveform
  (1) The subject is color bar of pattern box.
  (2) The voltage value is a reference value between the grounding.
  (The tester used is the digital multimeter DC10MΩ)
  (3) The voltage value are all in the recording mode of operation.

Note (PRINTED WIRING BOARD) :

- ⊗ : mark is slew hole.
- ○— : lead wire attached to the component side.
- ●— : lead wire attached to the pattern side.
- : pattern from the side which enables seeing.
- : pattern of the rear side.
- : B+ pattern.
- : printing resistance.
- The voltage value is all recording mode of operation.

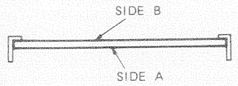

Note
Soldering side: Parts on the soldering side being seen from the soldering are stated.
Component side: Parts on the component side being seen from the component are stated.

Regarding color indication of patterns
* Patterns being seen in the state from the surface side are indicated in gray pattern and red pattern (B+ pattern).
* Pattern being seen in the state of the rear surface side is indicated in green pattern.

Q , IC	D	ADJ
IC881		
892		
893		
883		
885		
886		
887		
884		
882		RV890
889		
888 881	882	
890		
	881	
891		
		RV881
		RV882 RV889 RV883
		RV884 RV887 RV886 RV891 RV888

ED-11 BOARD (SIDE A)

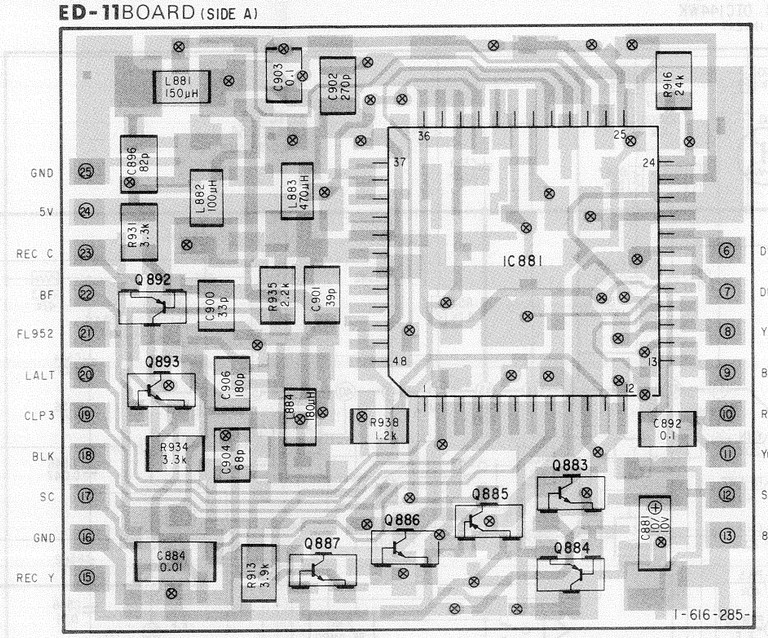

ED-11 BOARD (SIDE B)

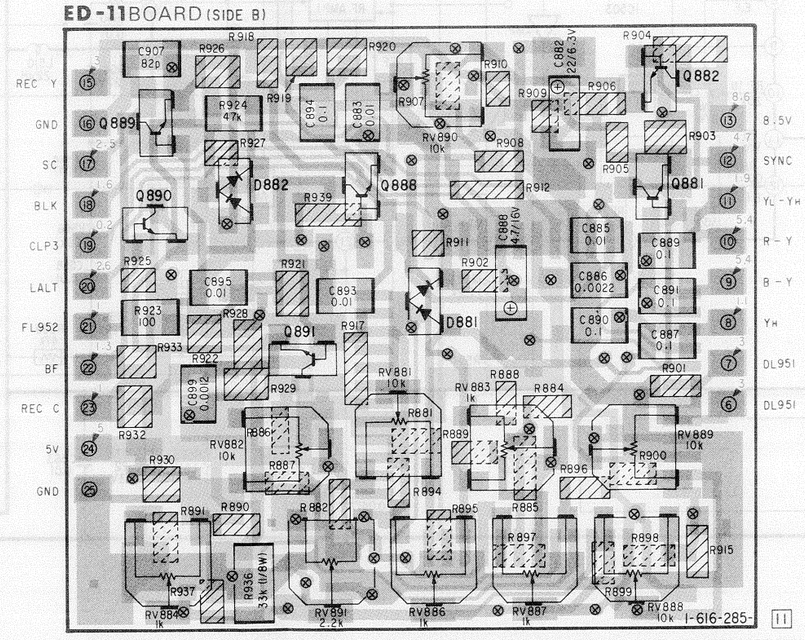

ED-11

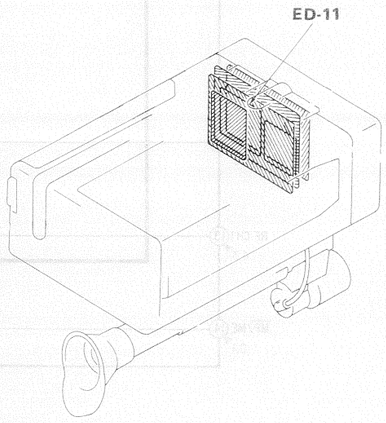

RP-29 (HEAD AMP) SCHEMATIC DIAGRAM

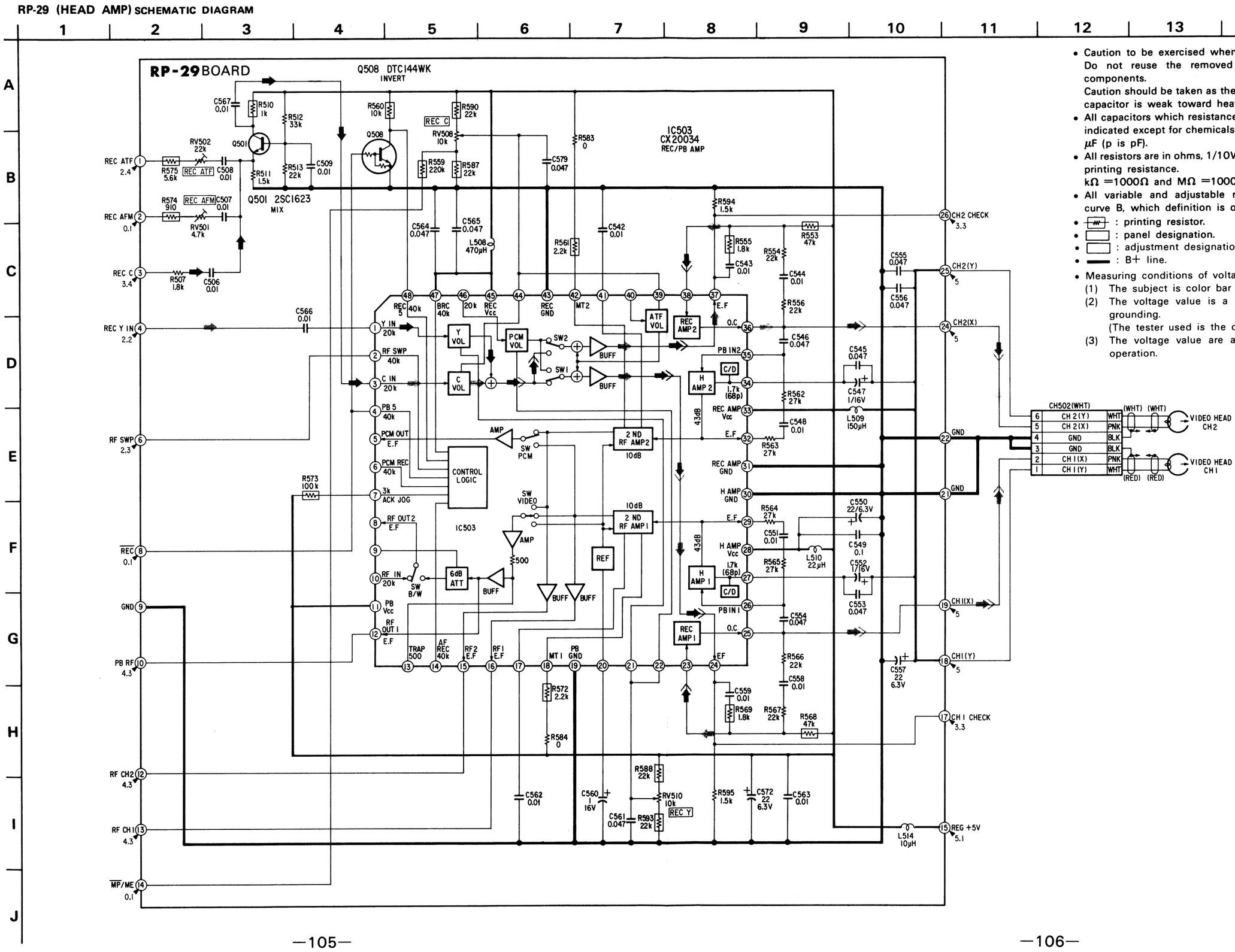

- Caution to be exercised when replacing chip components Do not reuse the removed components but use new components.
  Caution should be taken as the negative side of the tantalum capacitor is weak toward heat.
- All capacitors which resistance pressure 50V or less are not indicated except for chemicals and tantalums. The unit is all µF (p is pF).
- All resistors are in ohms, 1/10W in chip resistance; 1/32W in printing resistance.
  kΩ =1000Ω and MΩ =1000kΩ
- All variable and adjustable resistors have characteristics curve B, which definition is omitted.
- ▭ : printing resistor.
- ▭ : panel designation.
- ▭ : adjustment designation.
- ▬ : B+ line.
- Measuring conditions of voltage value and waveform
  (1) The subject is color bar of pattern box.
  (2) The voltage value is a reference value between the grounding.
  (The tester used is the digital multimeter DC10MΩ)
  (3) The voltage value are all in the recording mode of operation.

Signal path
- ➡ : REC Y/C Signal
- ➡ : REC Y Signal
- ➡ : REC C Signal

- ⊗ : mark is slew hole.
- ○— : lead wire attached to the component side.
- ●— : lead wire attached to the pattern side.
- ▒ : pattern from the side which enables seeing.
- ▒ : pattern of the rear side.
- ▒ : B+ pattern.
- ▨ : printing resistance.
- The voltage value is all recording mode of operation.
- Digital transistor (RP-29 : Q508)transistor with resistor. Refer to the RP-29 board schematic diagram for digital transistor.

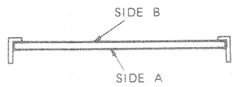

Note

Soldering side: Parts on the soldering side being seen from the soldering are stated.

Component side: Parts on the component side being seen from the component are stated.

Regarding color indication of patterns

* Patterns being seen in the state from the surface side are indicated in gray pattern and red pattern (B+ pattern).

* Pattern being seen in the state of the rear surface side is indicated in green pattern.

RP-29 (HEAD AMP) PRINTED WIRING BOARD

RP-29 BOARD (SIDE A)

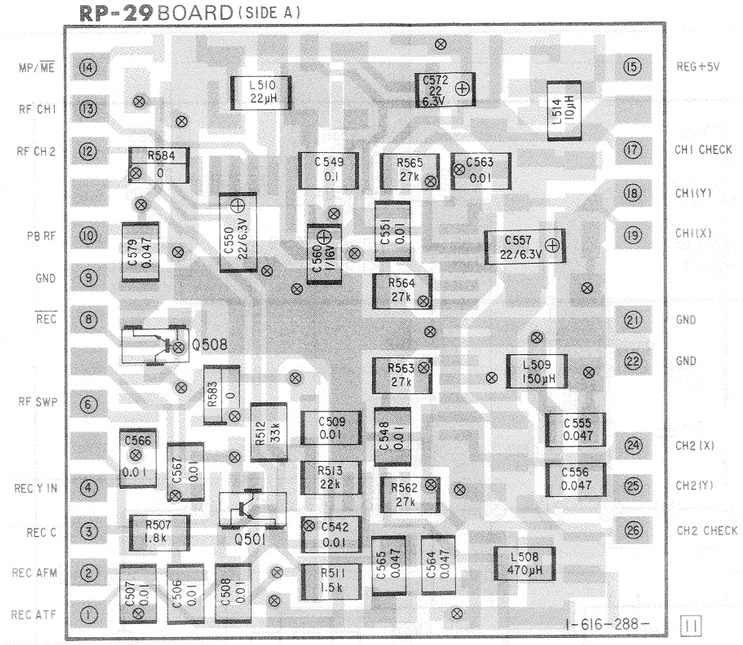

RP-29 BOARD (SIDE B)

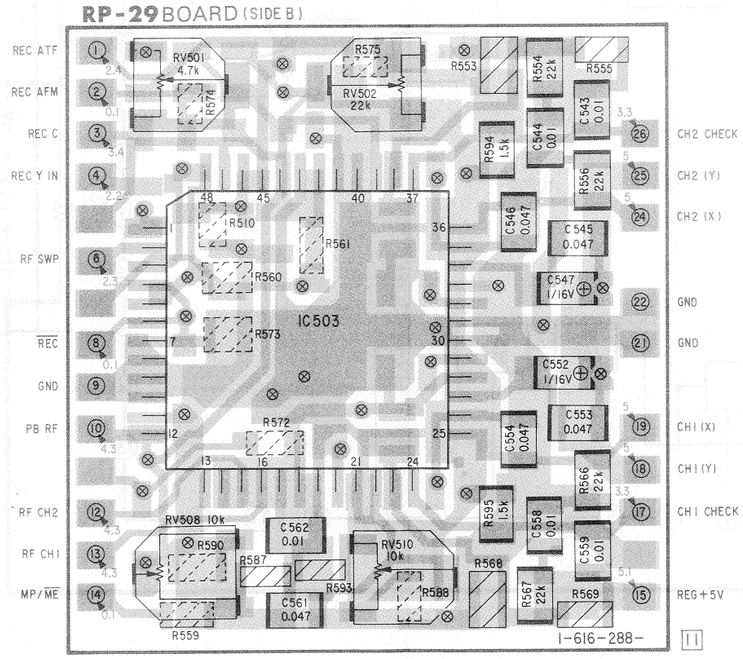

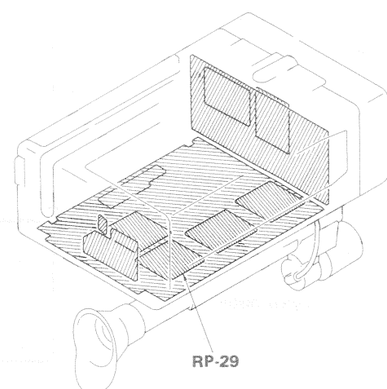

YM-2 (Y SIGNAL PROCESSING) SCHEMATIC DIAGRAM

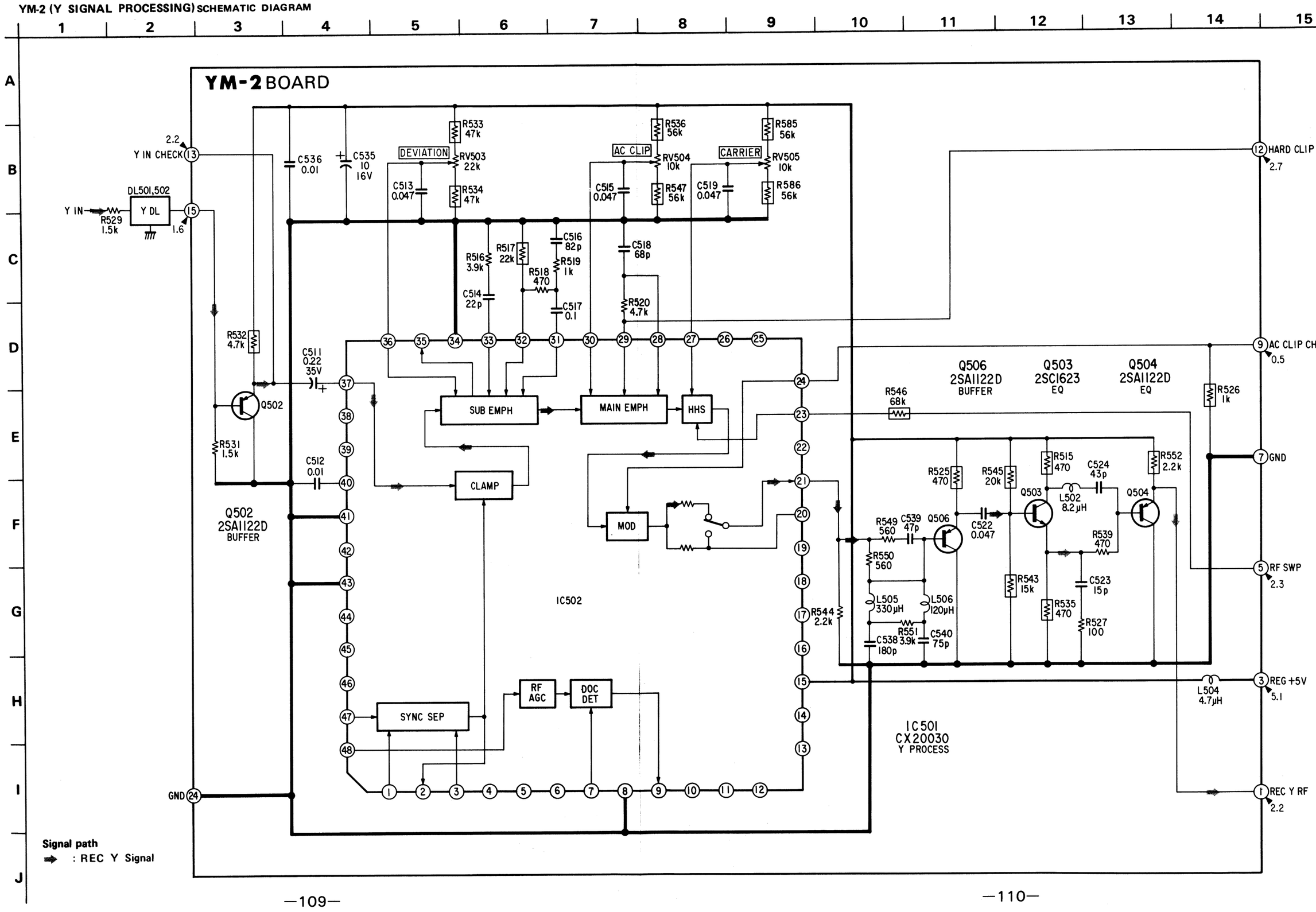

YM-2 (Y SIGNAL PROCESSING) PRINTED WIRING BOARD

- Caution to be exercised when replacing chip components
  Do not reuse the removed components but use new components.
  Caution should be taken as the negative side of the tantalum capacitor is weak toward heat.
- All capacitors which resistance pressure 50V or less are not indicated except for chemicals and tantalums. The unit is all μF (p is pF).
- All resistors are in ohms, 1/10W in chip resistance; 1/32W in printing resistance.
  kΩ =1000Ω and MΩ =1000kΩ
- All variable and adjustable resistors have characteristics curve B, which definition is omitted.

Note (SCHEMATIC DIAGRAM) :

- ⊣W⊢ : printing resistor.
- ▭ : panel designation.
- ▭ : adjustment designation.
- ▬ : B+ line.
- - - : B− line.
- Measuring conditions of voltage value and waveform
  (1) The subject is color bar of pattern box.
  (2) The voltage value is a reference value between the grounding.
  (The tester used is the digital multimeter DC10MΩ)
  (3) The voltage value are all in the recording mode of operation.

Note (PRINTED WIRING BOARD) :

- ⊗ : mark is slew hole.
- ○— : lead wire attached to the component side.
- ●— : lead wire attached to the pattern side.
- ▬ : pattern from the side which enables seeing.
- ▬ : pattern of the rear side.
- ▬ : B+ pattern.
- ▨ : printing resistance.
- The voltage value is all recording mode of operation.

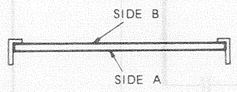

Note
Soldering side: Parts on the soldering side being seen from the soldering are stated.
Component side: Parts on the component side being seen from the component are stated.

Regarding color indication of patterns
* Patterns being seen in the state from the surface side are indicated in gray pattern and red pattern (B+ pattern).
* Pattern being seen in the state of the rear surface side is indicated in green pattern.

YM-2 BOARD (SIDE A)

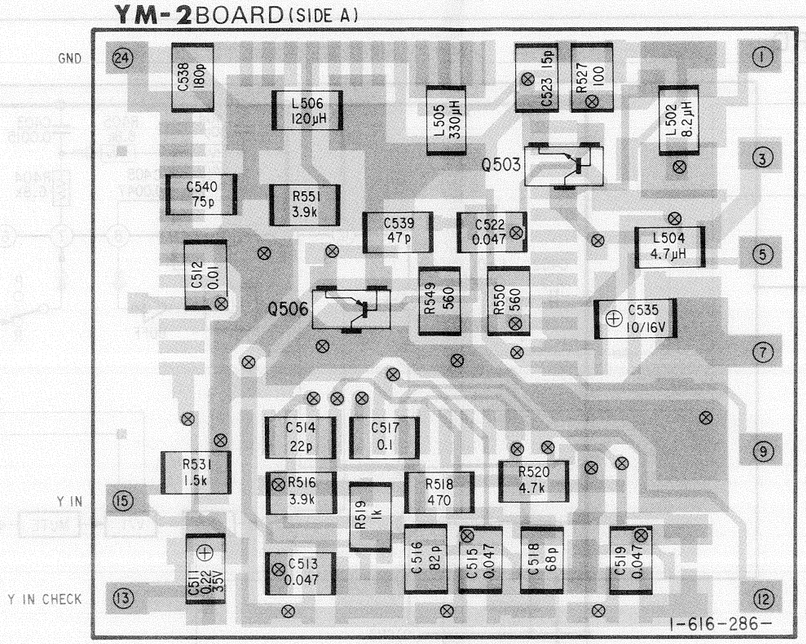

YM-2 BOARD (SIDE B)

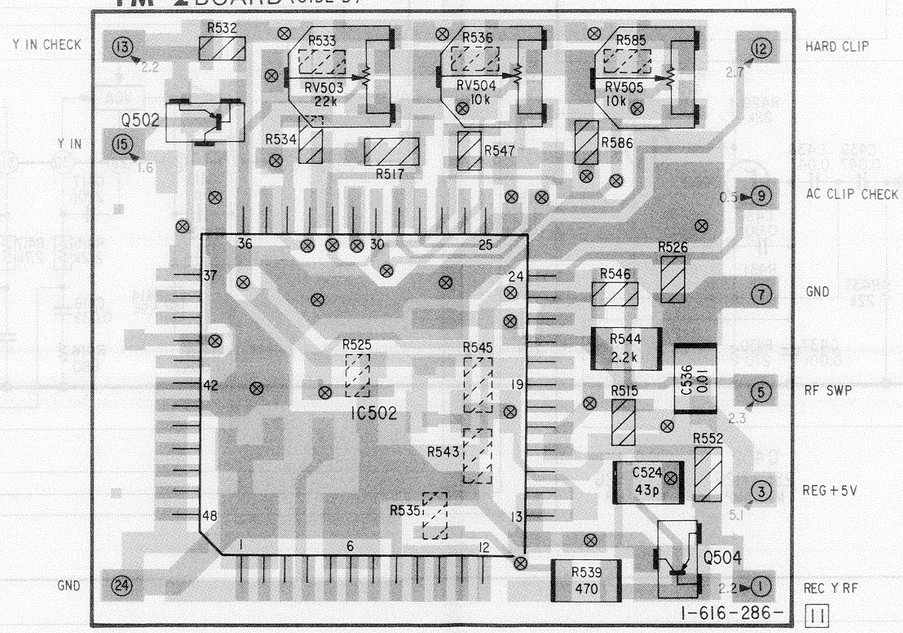

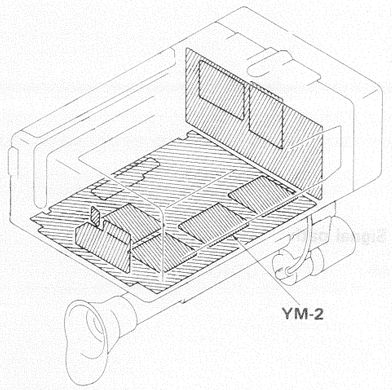

AU-16 (AUDIO) SCHEMATIC DIAGRAM

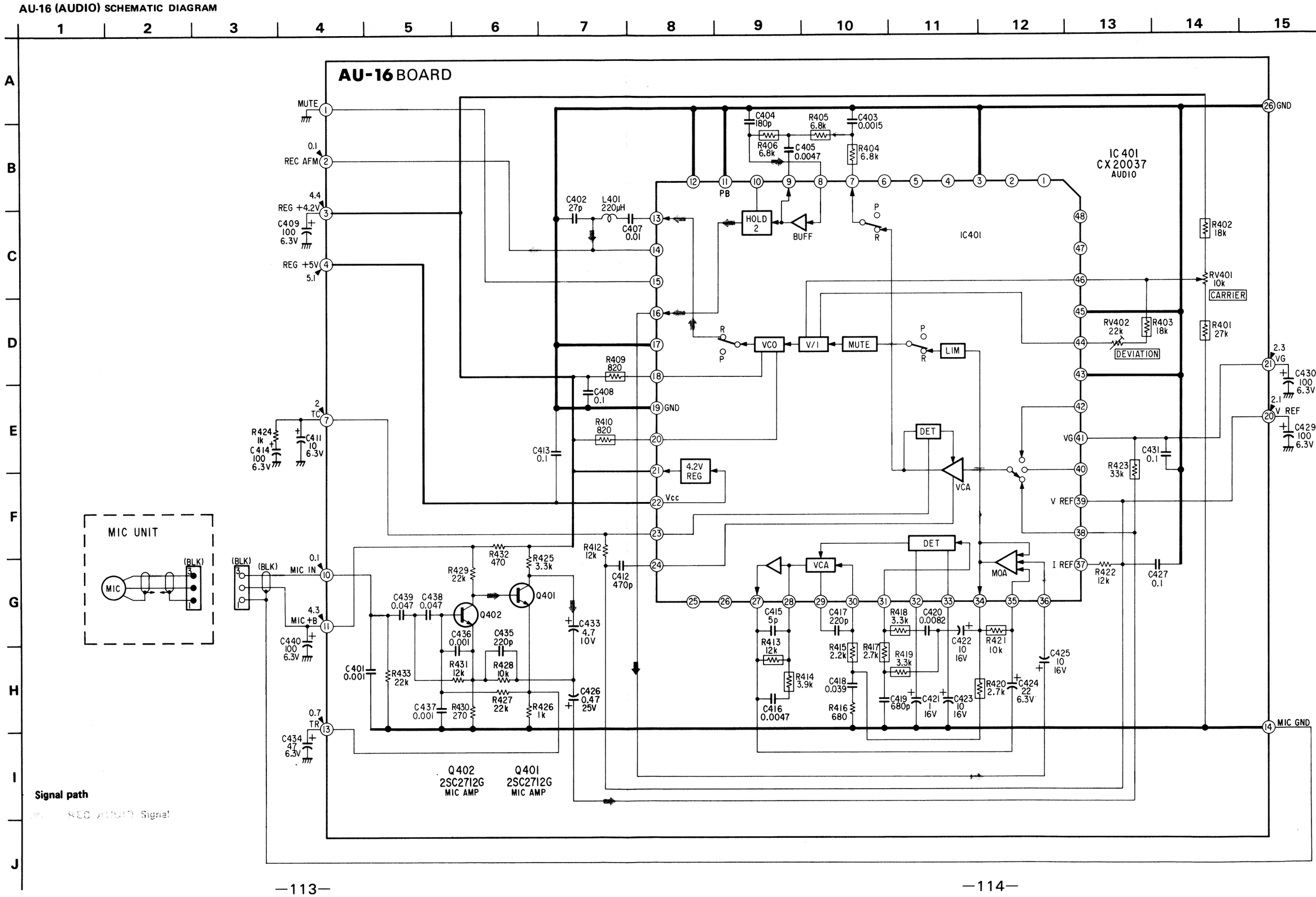

AU-16 (AUDIO) PRINTED WIRING BOARD

- Caution to be exercised when replacing chip components
  Do not reuse the removed components but use new components.
  Caution should be taken as the negative side of the tantalum capacitor is weak toward heat.
- All capacitors which resistance pressure 50V or less are not indicated except for chemicals and tantalums. The unit is all μF (p is pF).
- All resistors are in ohms, 1/10W in chip resistance; 1/32W in printing resistance.
  kΩ =1000Ω and MΩ =1000kΩ
- All variable and adjustable resistors have characteristics curve B, which definition is omitted.

Note (SCHEMATIC DIAGRAM) :

- : printing resistor.
- : panel designation.
- : adjustment designation.
- : B+ line.
- Measuring conditions of voltage value and waveform
  (1) The subject is color bar of pattern box.
  (2) The voltage value is a reference value between the grounding.
  (The tester used is the digital multimeter DC10MΩ)
  (3) The voltage value are all in the recording mode of operation.

Note (PRINTED WIRING BOARD) :

- ⊗ : mark is slew hole.
- ○— : lead wire attached to the component side.
- ●— : lead wire attached to the pattern side.
- : pattern from the side which enables seeing.
- : pattern of the rear side.
- : B+ pattern.
- : printing resistance.
- The voltage value is all recording mode of operation.

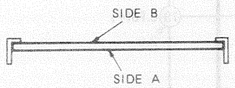

Note
Soldering side: Parts on the soldering side being seen from the soldering are stated.
Component side: Parts on the component side being seen from the component are stated.

Regarding color indication of patterns
* Patterns being seen in the state from the surface side are indicated in gray pattern and red pattern (B+ pattern).
* Pattern being seen in the state of the rear surface side is indicated in green pattern.

AU-16 BOARD (SIDE A)

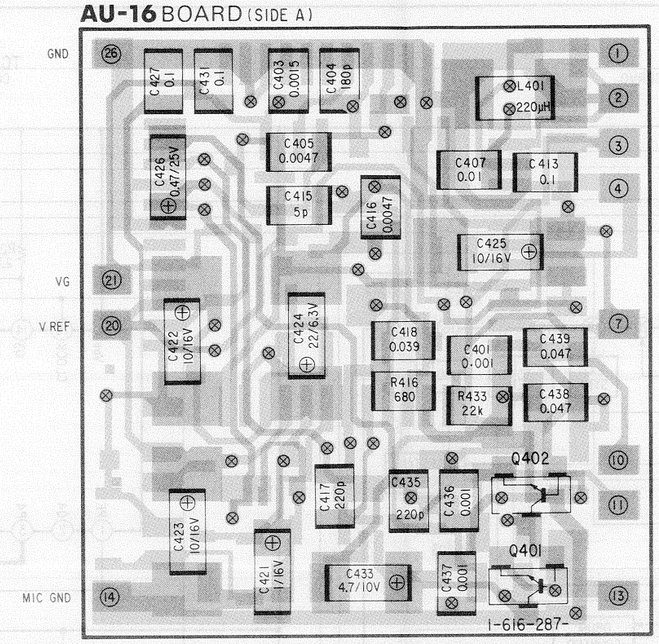

AU-16 BOARD (SIDE B)

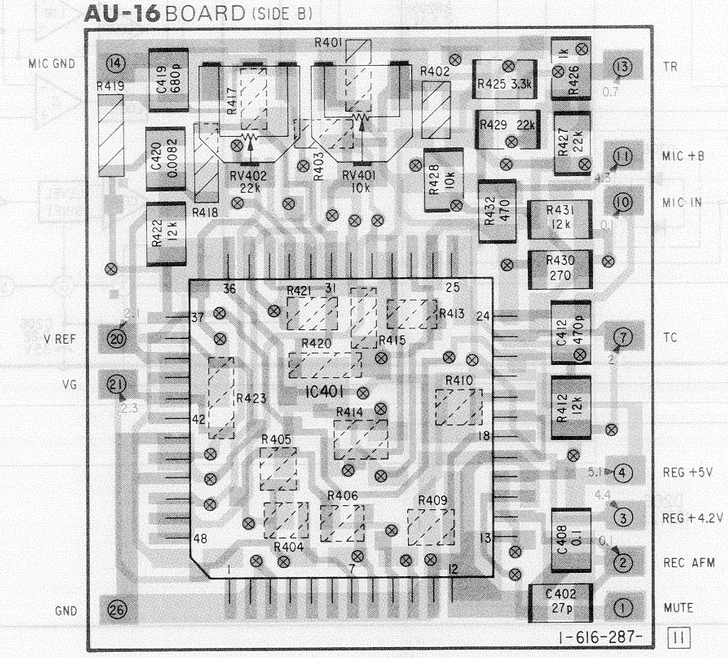

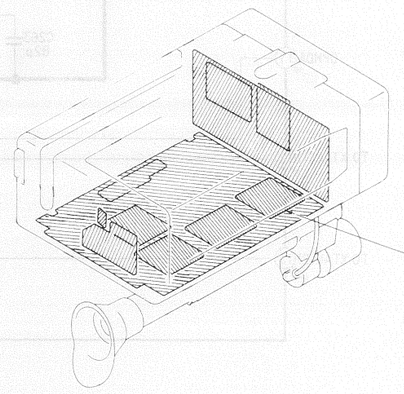

SV-16 (SERVO)SCHEMATIC DIAGRAM

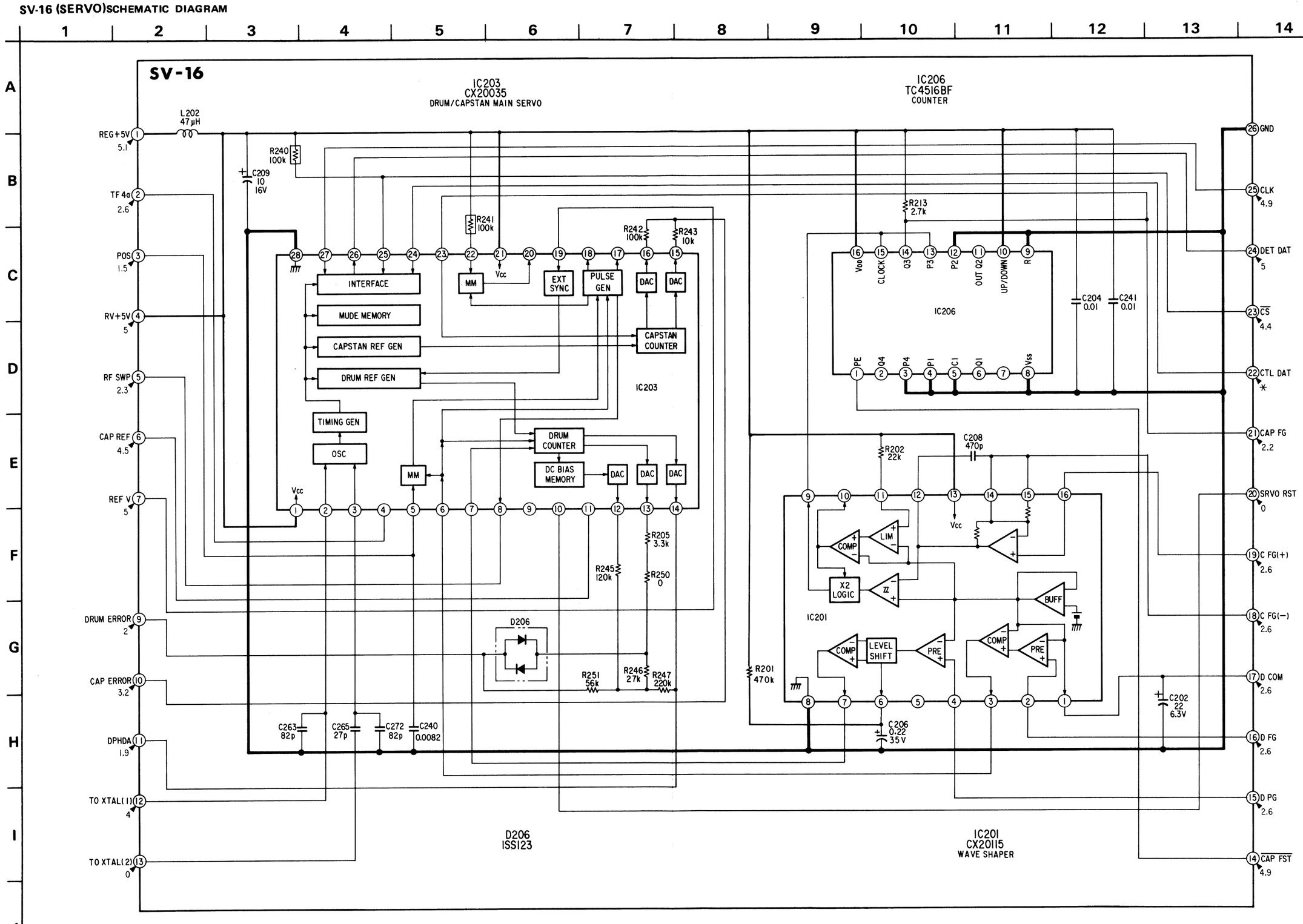

SV-16 (SERVO) PRINTED WIRING BOARD

- Caution to be exercised when replacing chip components
  Do not reuse the removed components but use new components.
  Caution should be taken as the negative side of the tantalum capacitor is weak toward heat.
- All capacitors which resistance pressure 50V or less are not indicated except for chemicals and tantalums. The unit is all μF (p is pF).
- All resistors are in ohms, 1/10W in chip resistance; 1/32W in printing resistance.
  kΩ =1000Ω and MΩ =1000kΩ
- All variable and adjustable resistors have characteristics curve B, which definition is omitted.

Note (SCHEMATIC DIAGRAM) :

- ⊣W⊢ : printing resistor.
- ▭ : panel designation.
- ▭ : adjustment designation.
- ▬ : B+ line.
- Measuring conditions of voltage value and waveform
  (1) The subject is color bar of pattern box.
  (2) The voltage value is a reference value between the grounding.
  (The tester used is the digital multimeter DC10MΩ)
  (3) The voltage value are all in the recording mode of operation.

Note (PRINTED WIRING BOARD) :

- ⊗ : mark is slew hole.
- ○— : lead wire attached to the component side.
- ●— : lead wire attached to the pattern side.
- ▬ : pattern from the side which enables seeing.
- ▬ : pattern of the rear side.
- ▬ : B+ pattern.
- ▨ : printing resistance.
- The voltage value is all recording mode of operation.

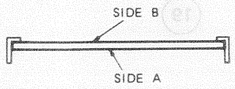

Note
Soldering side: Parts on the soldering side being seen from the soldering are stated.
Component side: Parts on the component side being seen from the component are stated.

Regarding color indication of patterns
* Patterns being seen in the state from the surface side are indicated in gray pattern and red pattern (B+ pattern).
* Pattern being seen in the state of the rear surface side is indicated in green pattern.

SV-16 BOARD (SIDE A)

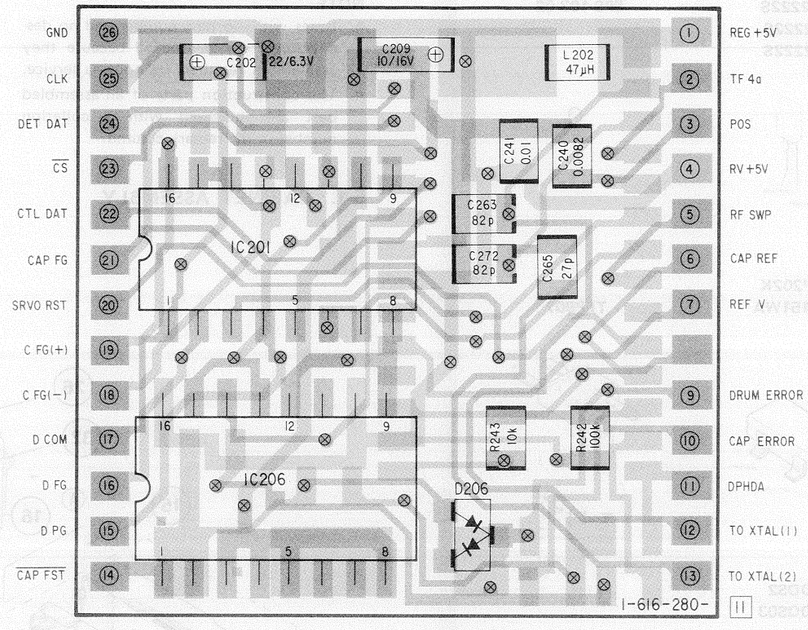

SV-16 BOARD (SIDE B)

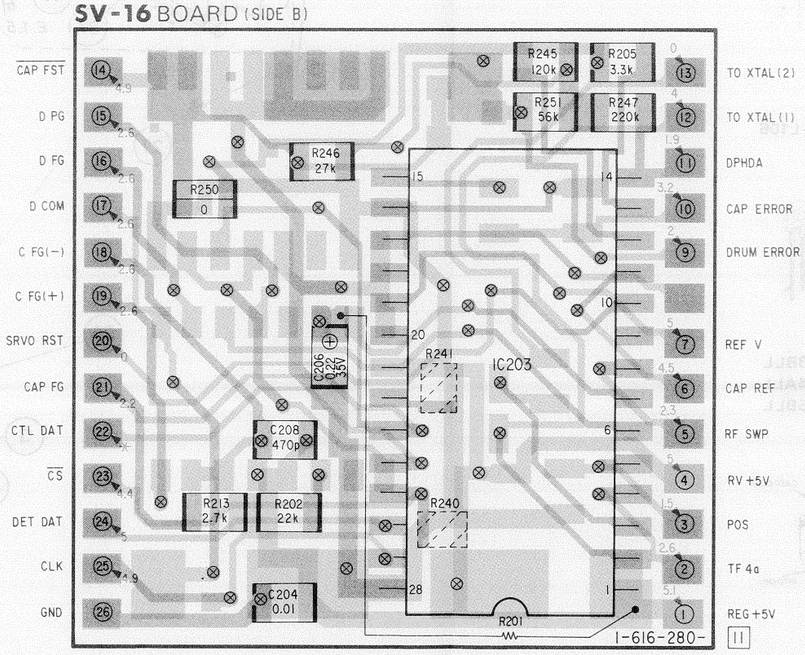

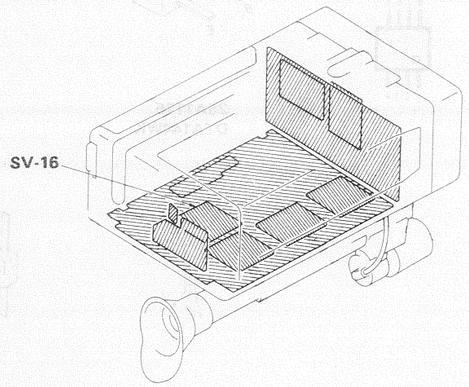

4-3. SEMICONDUCTORS

CX20036

CX20114

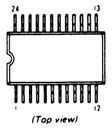

CXD1011Q
MB88501-405L

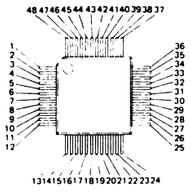

TL022CPS

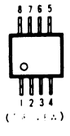

TL431CLPB

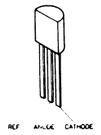

μPC324G2

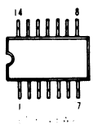

2SA1122
2SA1162
2SA1179
2SA812
2SC1623
2SC2223
2SC2412
2SC2712
2SC2812L5
2SC2812L6
2SC2812L7
DTA114YK
DTA143EK
DTA144EK
DTC114EK
DTC144WK

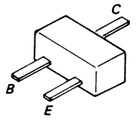

2SA1175
DTA144WK

2SA1385

2SB1000AKTR
2SB798
2SD1366ACTR
2SD999

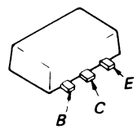

1S2835

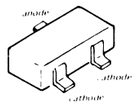

1SS123
DA204K
MA153

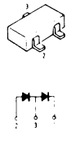

1T25

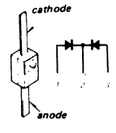

AA2222S
PY2222S
RP2222S

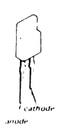

DAP202K
MA151WA

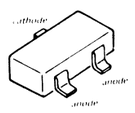

E10DS2
E10QS03

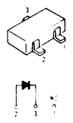

EE-L106

HZ3BLL
HZ4ALL
HZ5BLL

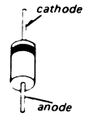

SPS-103-02

TLP907

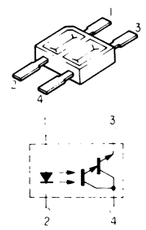

SECTION 5
EXPLODED VIEWS

NOTE:

- Itmes with no part number and no description are not stocked because they are seldom required for routine service.
- The construction parts of an assembled part are indicated with a collation number in the remark column.
- Items marked "*" are not stocked since they are seldom required for routine service. Some delay should be anticipated when ordering these items.
- The mechanical parts with no reference number in the exploded views are not supplied.

5-1. CABINET ASSEMBLY

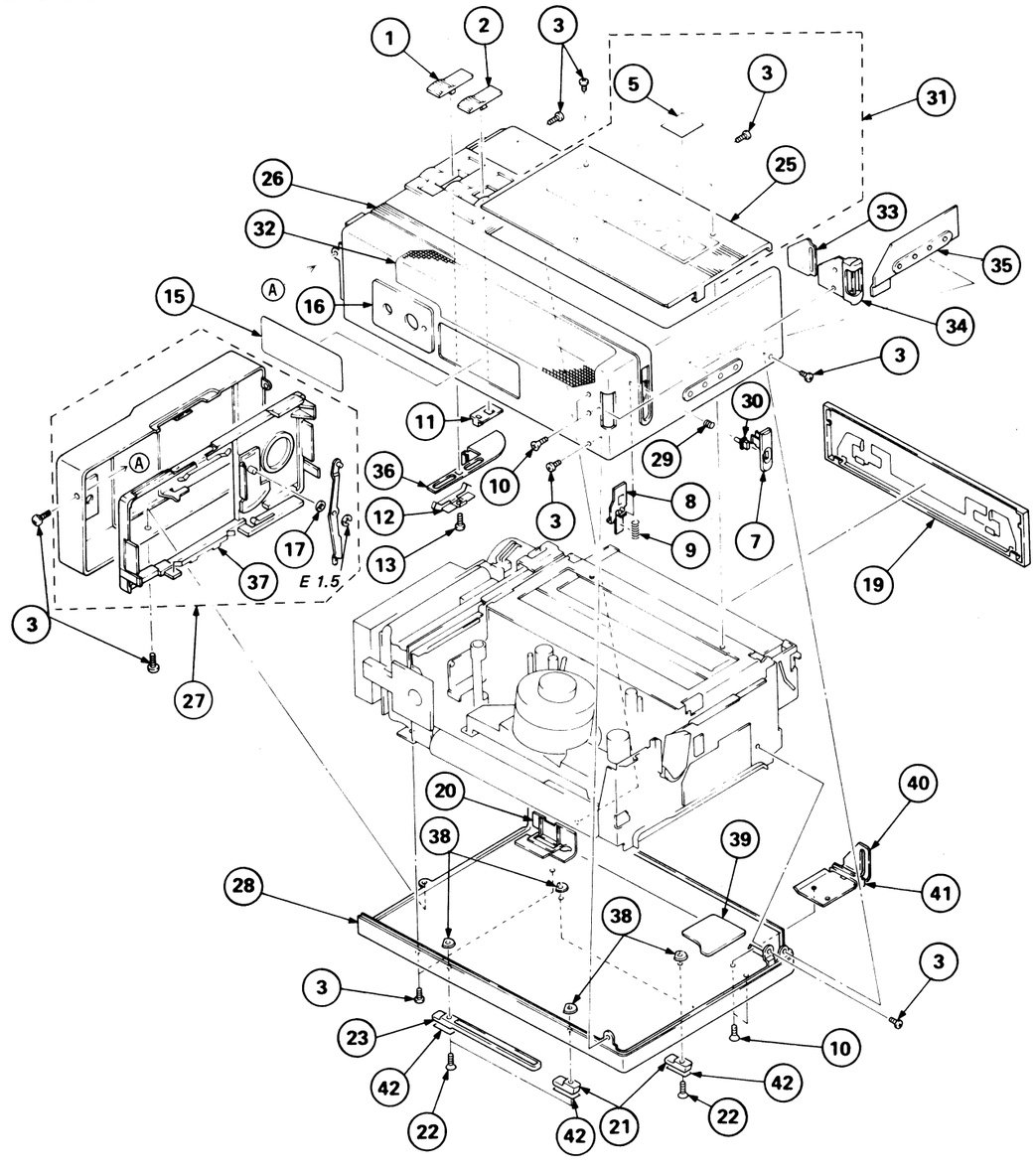

No.	Part No.	Description	Remark
1	3-695-427-01	KNOB, F (FOR BLACK MODEL)	
	3-695-427-21	KNOB, F (FOR SILVER MODEL)	
2	3-695-406-01	KNOB, WB (FOR BLACK MODEL)	
	3-695-406-21	KNOB, WB (FOR SILVER MODEL)	
3	3-695-653-01	SCREW (1.7x3), TAPPING (BLACK)	
	3-695-653-11	SCREW (1.7x3), TAPPING (SILVER)	
5	3-703-710-41	STICKER, SONY SYMBOL (12)	
7	3-695-404-01	KNOB, EJECT (WITHOUT LOCK MECHANISM)	
	3-699-537-01	KNOB, EJECT (WITH LOCK MECHANISM)	
8	3-695-405-01	JOINTER, EJECT (WITHOUT LOCK MECHANISM)	
	3-699-535-01	JOINTER, EJECT (WITH LOCK MECHANISM)	
9	3-695-482-02	SPRING, COMPRESSION (WITHOUT LOCK MECHANISM)	
	3-699-533-01	SPRING, COMPRESSION (WITH LOCK MECHANISM)	
10	3-695-667-01	SCRREW (2x3) (BLACK)	
	3-695-667-11	SCREW (2x3) (SILVER)	
11	3-695-407-01	JOINTER, WB	
12	3-695-441-01	SPRING	
13	4-908-792-51	SCREW (B2x5), TAPPING, P1	
15	*3-696-056-01	LABEL, MODEL NUMBER (AS, E, UK MODEL)	
	*3-696-057-01	LABEL, MODEL NUMBER (BLACK) (AEP MODEL)	
	*3-696-057-11	LABEL, MODEL NUMBER (SILVER) (AEP MODEL)	
16	3-695-409-01	PLATE, BOTTOM (BLACK)	
	3-695-409-11	PLATE, BOTTOM (SILVER)	
17	3-701-437-21	WASHER	
19	X-3686-760-1	LID ASSY, LS (SILVER)	
	X-3695-422-1	LID ASSY, LS (BLACK)	
20	3-695-662-01	PANEL, CN (BLACK)	
	3-695-662-21	PANEL, CN (SILVER)	
21	3-695-484-01	GUIDE (C), GRIP (BLACK)	
	3-695-484-11	GUID (C), GRIP (SILVER)	
22	3-695-668-01	SCREW (2x6) (BLACK)	
	3-695-668-11	SCREW (2x6) (SILVER)	
23	3-695-429-01	GUIDE (B), GRIP (BLACK)	
	3-695-429-11	GUIDE (B), GRIP (SILVER)	
25	X-3686-759-1	LID ASSY, CASSETTE COMPARTMENT (SILVER)	
	X-3695-408-2	LID ASSY, CASSETTE COMPARTMENT (BLACK)	
26	A-7080-076-A	CABINET (RIGHT) BLOCK ASSY (BLACK)	
	A-7080-143-A	CABINET (RIGHT) BLOCK ASSY (SILVER)	
27	A-7080-053-A	CABINET BLOCK ASSY, FRONT (BLACK)	
	A-7080-125-A	CABINET BLOCK ASSY, FRONT (SILVER)	
28	A-7080-077-A	CABINET (LEFT) BLOCK ASSY (BLACK)	
	A-7080-140-A	CABINET (LEFT) BLOCK ASSY (SILVER)	
29	3-699-532-01	SPRING, COMPRESSION (WITH LOCK MECHANISM)	
30	3-699-534-01	KNOB, LOCK (WITH LOCK MECHANISM)	
31	A-7040-048-C	CASSETTE COMPARTMENT BLOCK ASSY (BLACK)	
32	3-695-408-01	LEATHER (MAIN)	
33	3-695-463-01	HOOK (A), BELT	
34	3-695-464-01	COVER (A), HOOK	
35	3-695-413-01	GUIDE (A), LED	
36	3-695-426-01	PLATE, JOINT, F	
37	*X-3695-410-1	CABINET ASSY, LENS (BLACK)	
	*X-3686-761-1	CABINET ASSY, LENS (SILVER)	
38	3-695-481-01	NUT, PLATE	
39	*3-695-412-01	GUIDE (B), LED	
40	3-695-465-01	HOOK (B), BELT	
41	3-695-466-01	COVER (B), HOOK	
42	3-695-480-01	REINFORCEMENT, G GUIDE (BLACK)	
	3-695-480-11	REINFORCEMENT, G GUIDE (SILVER)	

5-2. GRIP ASSEMBLY

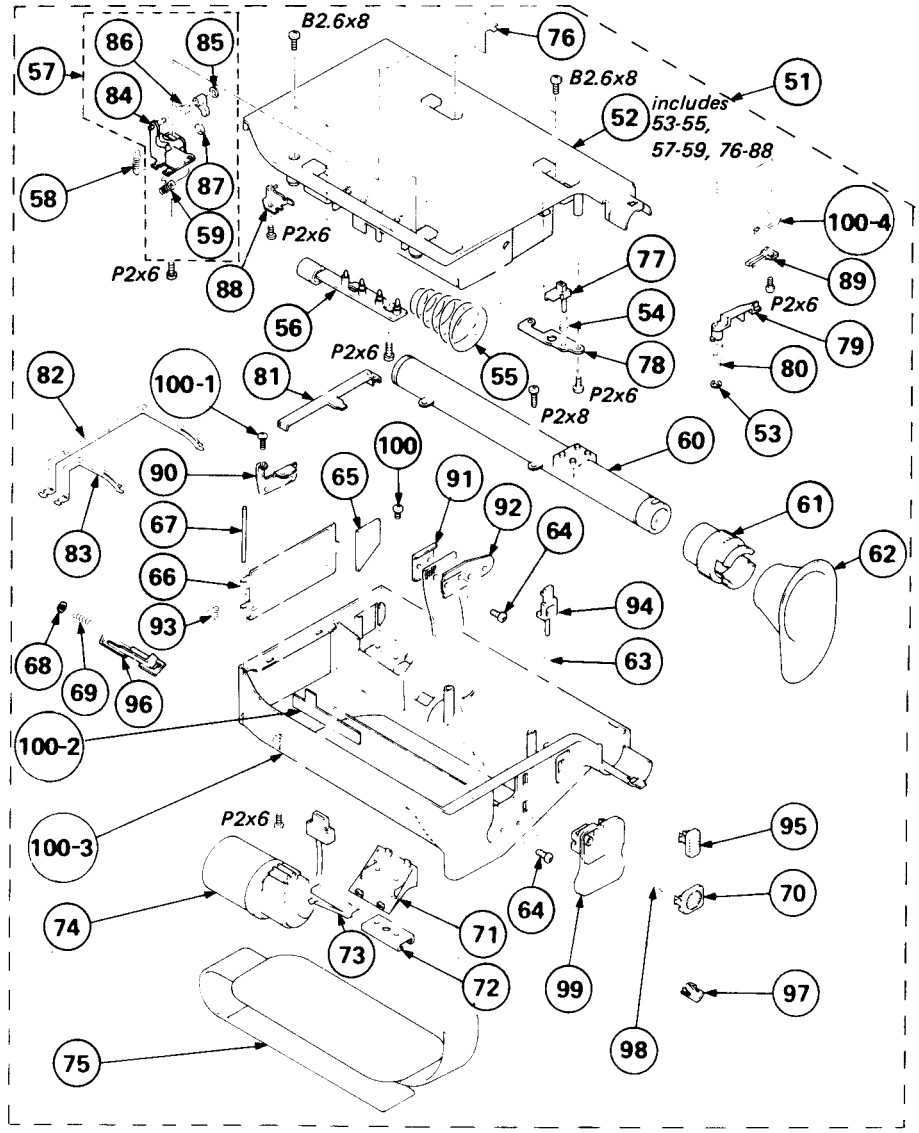

No.	Part No.	Description	Remark
51	*A-7080-063-A	GRIP BLOCK ASSY(US,CANADIAN MODEL)	52-100-4
	*A-7080-054-A	GRIP BLOCK ASSY (E MODEL)	52-100-4
52	A-7080-058-A	CABINET (R) BLOCK ASSY, GRIP	
53	3-578-254-00	RING, RETAINING, E1.2	
54	3-568-315-01	SPRING, COMPRESSION	
55	3-686-775-01	SPRING	
56	*1-616-467-11	FH-3 BOARD	
57	A-7090-137-A	SUPPORT (UPPER)BLOCK ASSY, LOCK	
58	3-307-377-11	SPRING, TENSION	
59	3-571-829-00	SPRING, TENSION	
60	1-547-187-11	OVF	
61	3-695-475-01	RING, RETAINING, EYE CUP	
62	3-695-502-01	EYE CUP	
63	3-480-102-00	SPRING, COMPRESSION	
64	3-695-675-01	SCREW (2X5)	
65	3-695-433-01	WINDOW, OVF	
66	3-695-459-01	LID, BATTERY CASE	
67	3-695-460-01	SHAFT, BATTERY CASE LID	
68	3-533-073-00	WASHER	
69	3-695-457-01	SPRING, COMPRESSION	
70	3-695-438-01	BUTTON, R	
71	3-695-672-01	COVER, FITTING, MICROPHONE	
72	3-695-673-01	SHOE, MICROPHONE	
73	3-695-674-01	SPRING	
74	8-810-511-90	C-2009 SET (MIC)	
75	3-695-458-01	BELT, GRIP	

No.	Part No.	Description	Remark
76	*3-695-779-01	SHEET (A), BLIND	
77	3-695-439-01	LEVER, G LOCK	
78	*3-695-485-01	GUIDE, G LOCK	
79	3-695-478-01	LEVER, R	
80	3-695-461-01	SPRING, TORSION	
81	*3-695-446-03	PLATE, LOCK, B	
82	3-695-435-01	TERMINAL (B), BATTERY	
83	3-695-434-01	TERMINAL (A), BATTERY	
84	X-3695-403-1	SUPPORT (UPPER) ASSY, B LOCK	
85	3-321-813-11	WASHER, COTTER POLYETHYLENE	
86	3-695-452-01	SPRING, TORSION	
87	3-315-384-11	WASHER, STOPPER	
88	X-3695-404-1	SUPPORT (LOWER) ASSY, B LOCK	
89	1-570-290-11	SWITCH, LEAF	
90	3-695-430-01	BRACKET, BELT	
91	3-695-431-01	BRACKET (A), BELT	
92	3-695-432-01	BRACKET (B), BELT	
93	3-695-766-01	SPRING, TORSION	
94	3-695-474-01	LEVER,G RELEASE	
95	3-695-473-01	KNOB, G RELEASE	
96	3-695-455-01	LEVER, RELEASE, B	
97	3-695-456-01	KNOB, RELEASE, B	
98	3-303-890-01	SPRING, COMPRESSION	
99	3-695-501-01	GUIDE, R BUTTON	
100	3-695-795-01	SCREW (2x3),(1)(+)(B)	
100-1	3-699-401-01	SCREW (2x4),(+)(B)	
100-2	*3-695-782-01	SHEET (C), BLIND	
100-3	*3-695-483-01	LEATHER (GRIP)	
100-4	3-695-751-02	SPRING	

5-3. CASSETTE ARM AND FRAME A-B ASSEMBLY

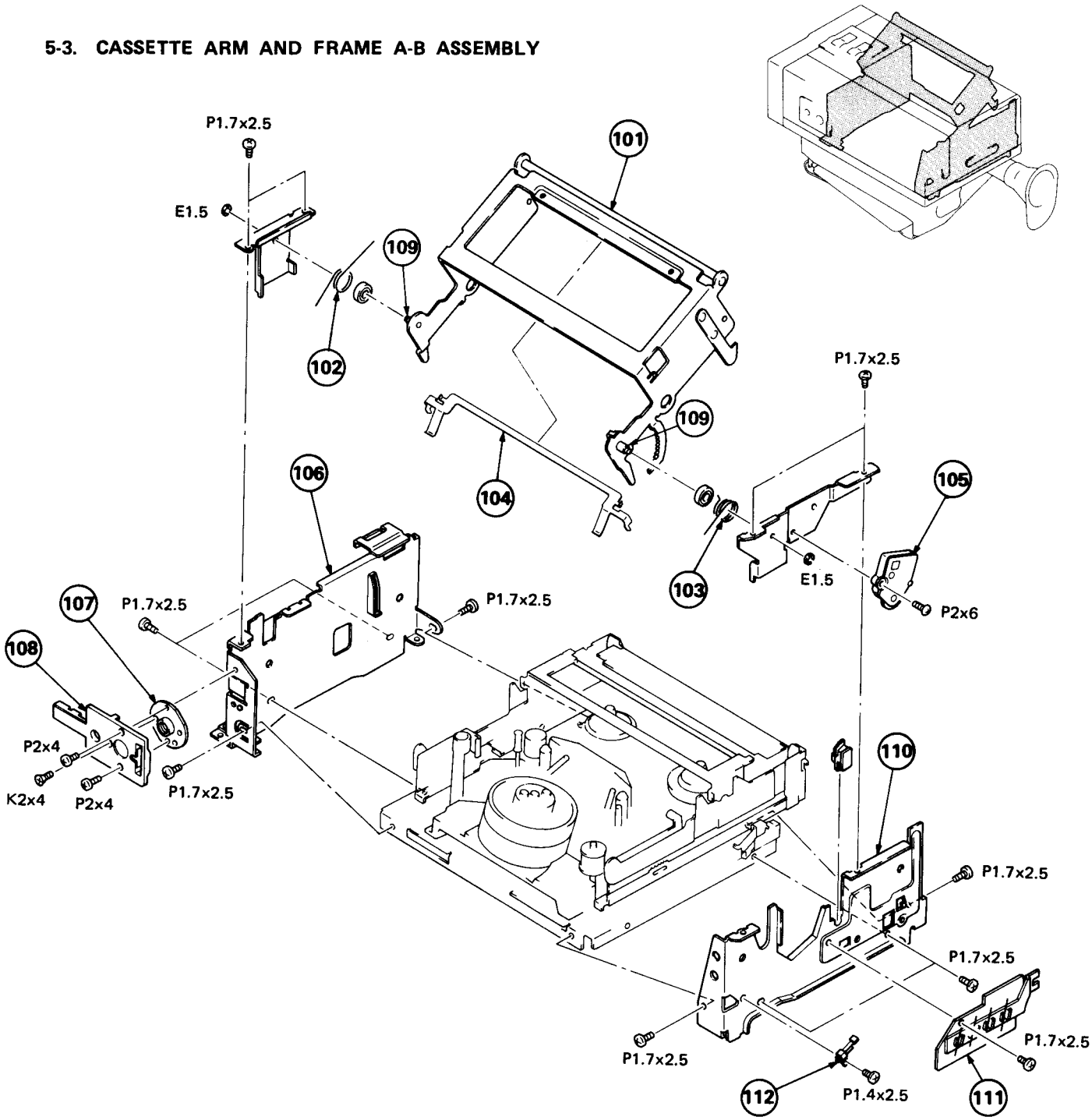

No.	Part No.	Description	Remark
101	X-3695-449-1	ARM ASSY, CASSETTE	104, 109
102	3-695-582-01	SPRING, TORSION	
103	3-695-581-01	SPRING, TORSION	
104	3-695-580-01	RETAINER, CASSETTE COMPARTMENT	
105	3-681-528-11	DAMPER	
106	*X-3695-451-1	FRAME (A) ASSY	
107	3-695-401-01	SCREW, TRIPOD	
108	*3-695-402-01	PLATE, TRIPOD	
109	3-695-602-01	SHAFT, RIVETING, CASSETTE ARM	
110	*X-3695-452-1	FRAME (B) ASSY	
111	1-616-450-11	FP-16 FLEXIBLE BOARD	
112	1-553-226-00	SWITCH, LEAF (EJECT SW) S201	

5-4. LS CASSETTE COMPARTMENT ASSEMBLY

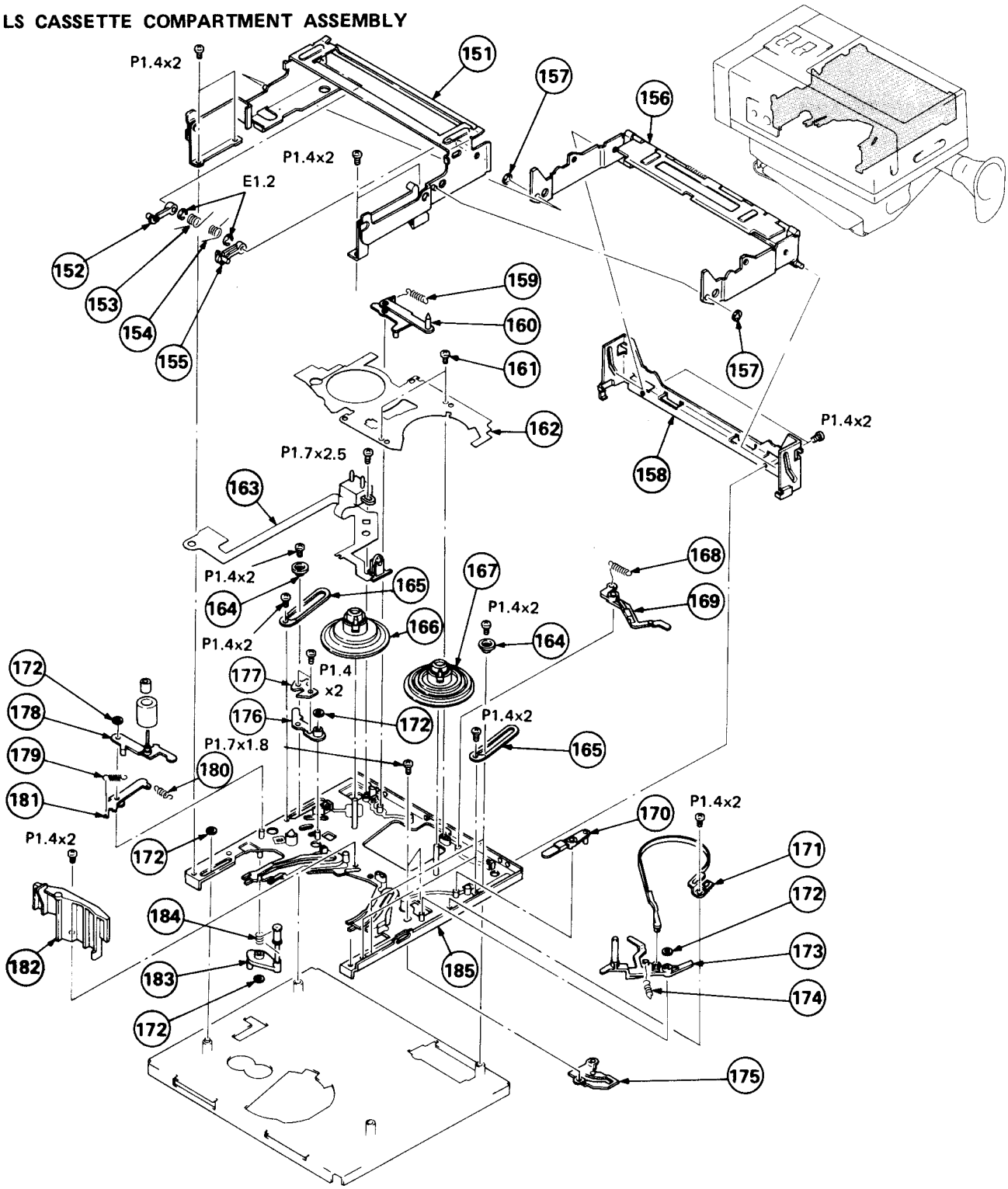

No.	Part No.	Description	Remark
151	X-3695-447-1	COMPARTMENT ASSY, CASSETTE, LS	
152	3-695-595-01	RETAINER (T), CASSETTE	
153	3-695-605-01	SPRING, TORSION	
154	3-695-604-01	SPRING, TORSION	
155	3-695-594-01	RETAINER (S), CASSETTE	
156	X-3695-448-3	ARM ASSY, BLIND	
157	3-669-465-00	WASHER (1.5), STOPPER	
158	3-695-646-01	ARM, LS	
159	3-695-718-01	SPRING, TENSION	
160	X-3695-431-1	LEVER (A) ASSY	
161	2-481-114-01	SCREW (A), TAPPING, EV	
162	*3-695-737-01	PLATE, STOPPER	
163	*A-7060-205-A	FP-8 BOARD, COMPLETE	
164	3-695-698-01	GUIDE, LS	
165	3-695-697-01	SPRING, LEAF, LS	
166	X-3695-436-1	TABLE ASSY, REEL, TAKE-UP	
167	X-3695-435-1	TABLE ASSY, REEL, SUPPLY	
168	3-695-717-01	SPRING, TENSION	
169	3-695-584-01	BRAKE, SOFT	
170	3-695-735-01	ARM, TG1 RELEASE	
171	X-3695-432-1	BAND ASSY, TG1	
172	3-315-384-31	WASHER, STOPPER	
173	X-3695-430-2	ARM ASSY, TG1	
174	3-695-591-01	SPRING, TENSION	
175	3-695-733-01	PLATE, CAM, LS	
176	X-3695-420-1	ARM (B) ASSY, PINCH	
177	3-695-570-01	ARM (B-A), PINCH	
178	X-3695-437-1	PINCH ARM (C) ASSY	
179	3-695-622-01	SPRING, TENSION	
180	3-695-719-01	SPRING, TENSION	
181	X-3695-415-1	PINCH LEVER ASSY	
182	3-695-624-01	BASE, PROTECT	
183	X-3695-434-1	TG7 ASSY	
184	3-695-541-01	SPRING	
185	X-3695-445-1	CHASSIS ASSY, LS	

5-5. CHASSIS ASSEMBLY (1)

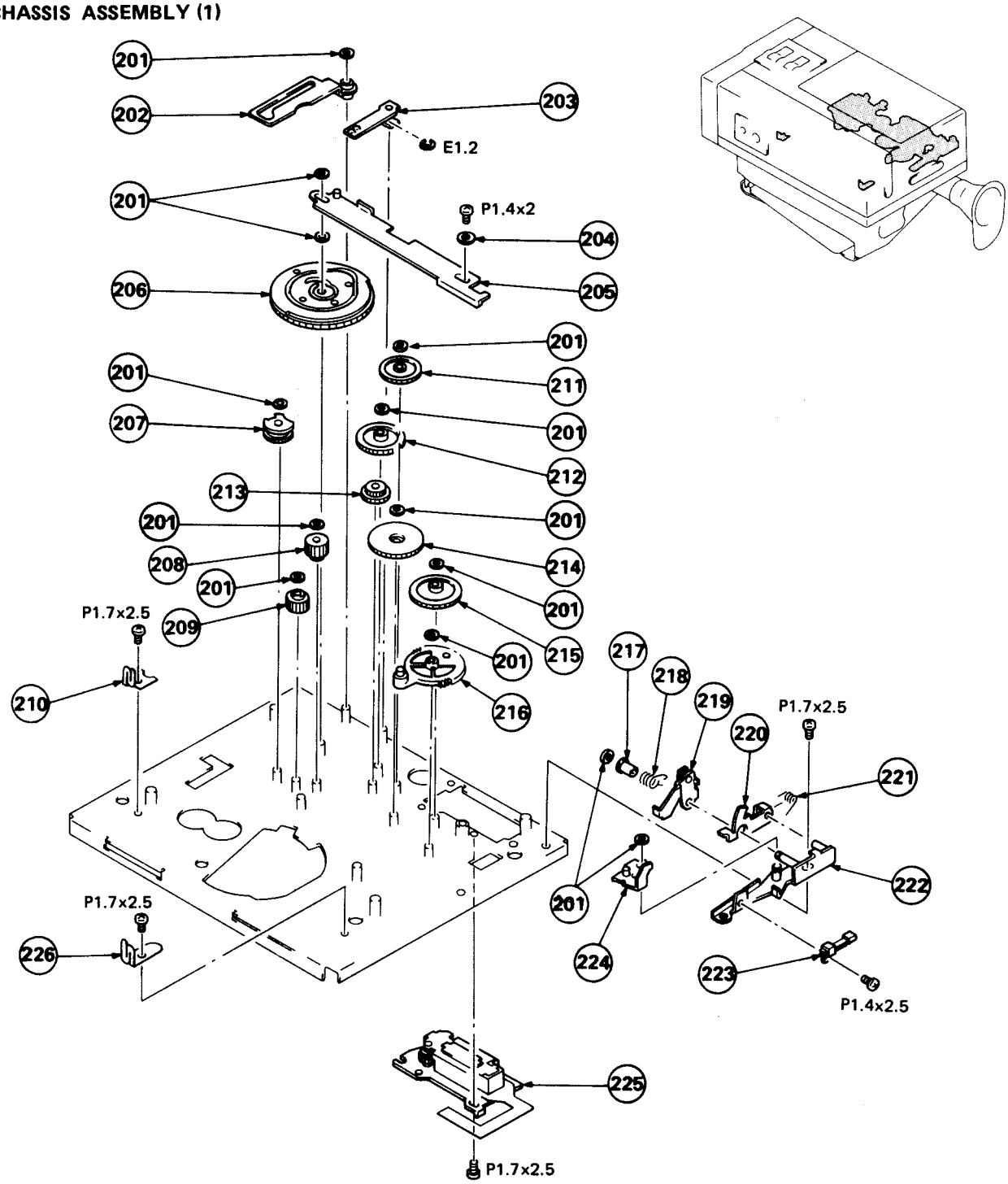

No.	Part No.	Description	Remark
201	3-315-384-31	WASHER, STOPPER	
202	X-3695-419-1	ARM (A) ASSY, PINCH	
203	3-695-589-01	LEVER (B), REEL LOCK	
204	3-695-567-01	WASHER, M SLIDER	
205	X-3695-439-1	SLIDER ASSY, M	
206	X-3695-421-1	CAM ASSY	
207	3-695-642-01	GEAR (M), THREADING	
208	3-695-537-01	GEAR (T), THREADING	
209	3-695-536-01	GEAR (S), THREADING	
210	*3-695-706-01	SPRING (T)	
211	3-695-559-01	GEAR (B), THREADING	
212	3-695-724-01	GEAR (D), THREADING	
213	3-695-560-01	GEAR (C), THREADING	
214	3-695-714-01	GEAR (A), LS	
215	3-695-563-01	GEAR (B), LS	
216	X-3695-417-1	GEAR (C) ASSY, LS	
217	3-695-573-01	SLEEVE, LOCK SHAFT	
218	3-695-716-01	SPRING (A), TORSION	
219	X-3695-418-1	ARM ASSY, LOCK	
220	3-695-574-01	ARM, RETURN PREVENTION	
221	3-695-579-01	SPRING (B), TORSION	
222	X-3695-433-1	BASE ASSY, LOCK	
223	1-553-226-00	SWITCH, LEAF (CCD SW) S902	
224	X-3695-438-1	ARM ASSY, EJECT	
225	A-7040-051-A	MOTOR BLOCK ASSY, LM M901	
226	*3-695-705-01	SPRING (S)	

5-6. CHASSIS ASSEMBLY (2)

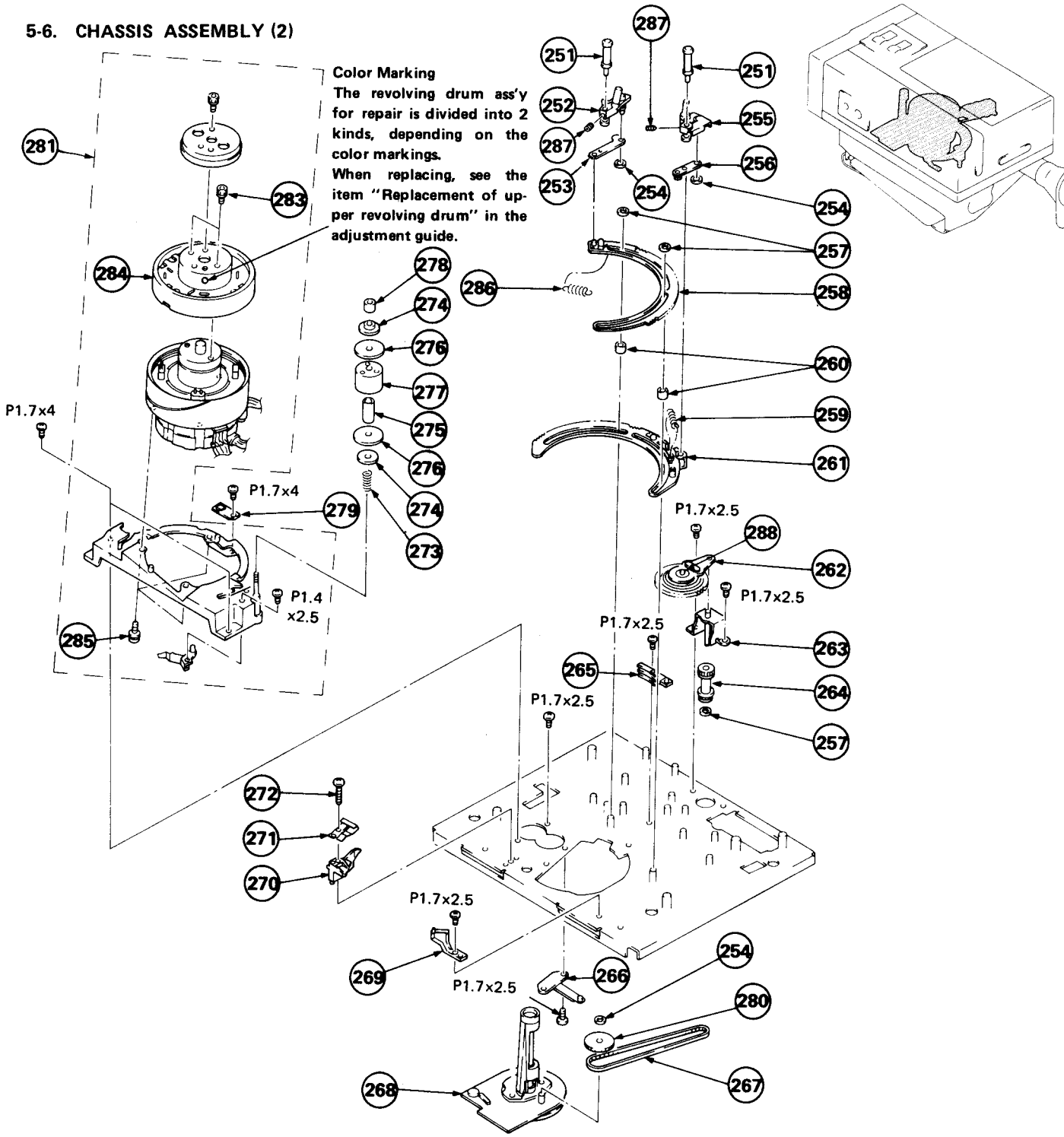

No.	Part No.	Description	Remark
251	X-3695-440-3	ROLLER ASSY, GUIDE	
252	X-3695-443-2	BASE ASSY, TG5	
253	3-695-545-01	JOINT, T	
254	3-321-393-01	WASHER, STOPPER	
255	X-3695-442-2	BASE ASSY, TG4	
256	X-3695-429-1	JOINT ASSY, S	
257	3-315-384-31	WASHER, STOPPER	
258	X-3695-414-1	SLIDER (T) ASSY, THREADING	
259	3-695-772-01	SPRING, TENSION	
260	3-695-544-01	ROLLER, GUIDE	
261	X-3695-428-1	SLIDER (S) ASSY, THREADING	
262	X-3695-427-1	ARM ASSY, GEAR	288
263	X-3695-426-1	BASE ASSY, RELAY PULLEY	
264	X-3695-412-1	PULLEY ASSY, RELAY	
265	3-695-703-01	SUPPORT, SLIDER	
266	1-535-574-11	TERMINAL, SHAFT GROUND	
267	3-695-637-01	BELT, RELAY	
268	8-838-103-01	MOTOR, DC (BHF-3300A) (CAPSTAN) M902	
269	3-695-627-01	STOPPER, SLIDER, S	
270	3-695-628-01	STOPPER, SLIDER, T	

No.	Part No.	Description	Remark
271	3-695-677-01	SPRING (T), LEAF	
272	3-695-519-01	SCREW, FITTING, LEAF SPRING(T)	
273	3-695-532-01	SPRING, COMPRESSION	
274	3-695-727-01	RETAINER, FLANGE, UPPER	
275	3-695-530-01	SLEEVE, TG2	
276	3-695-528-01	FLANGE, TG2	
277	3-695-730-01	ROLLER, TG2	
278	3-695-529-01	NUT, TG2	
279	1-807-238-11	SENSOR, DEW CONDENSATION	
280	X-3695-413-1	GEAR ASSY, CHANGE	
281	A-7048-033-A	DRUM ASSY (DVU-07A-R)	283-285
283	3-686-403-02	BOLT (WASHER)	
284	A-7049-051-A	DRUM ASSY, UPPER (DVR-07-R) MARKING; RED or BLUE	
	A-7049-050-A	DRUM ASSY, UPPER (DVR-07-R(O)) MARKING; BLACK or GREEN	
285	3-686-444-01	SCREW +P 2X5.5	
286	3-695-773-01	SPRING, TENSION	
287	3-695-770-01	SCREW, GR LOCK	
288	3-695-688-02	BOSS, ARM	

5-7. CAMERA AND BOARD ASSEMBLY

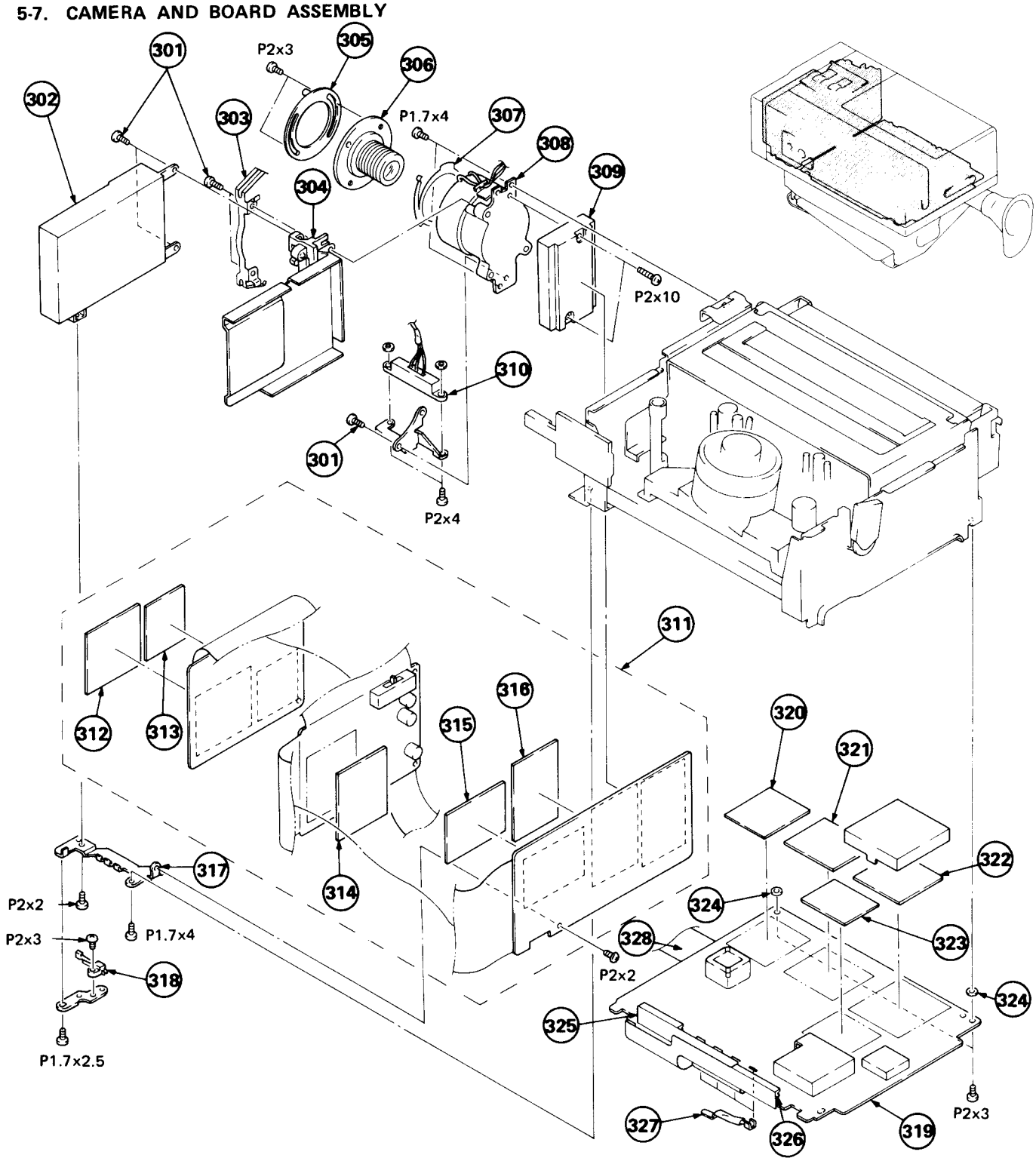

No.	Part No.	Description	Remark
301	3-695-670-01	SCREW (2X6), TAPPING (B)	
302	1-464-519-11	CONVERTER UNIT, DC-DC	
303	*3-695-416-01	SPRING	
304	*3-695-496-01	HOLDER (A), C PC BOARD	
305	*X-3695-401-1	RING ASSY, F	
306	1-547-188-11	LENS	
307	3-695-748-01	SPRING	
308	1-547-190-11	IRIS, RING	
309	8-750-010-23	IUX-001 (IU018-K-AA)	
310	1-558-160-12	SOCKET, CONNECTOR	
311	*A-7060-287-A	B-654 (VC-4, 5, 6) CAMERA BOARD, COMPLETE	312-316
312	A-7060-308-A	ED-11 BOARD, COMPLETE	
313	A-7060-085-A	IA-1 BOARD, COMPLETE	
314	A-7060-082-A	MX-2 BOARD, COMPLETE	
315	A-7060-087-A	SH-1 BOARD, COMPLETE	
316	A-7060-297-A	DT-60 BOARD, COMPLETE	
317	*3-695-403-01	HOLDER (B), C PC BOARD	
318	1-553-198-00	SWITCH, LEAF (LENS DOOR SW) S901	
319	*A-7060-292-A	MD-10 BOARD, COMPLETE	
320	A-7060-090-A	AU-16 BOARD, COMPLETE	
321	A-7060-091-A	YM-2 BOARD, COMPLETE	
322	A-7060-092-A	RP-29 BOARD, COMPLETE	
323	A-7060-293-A	SV-16 BOARD, COMPLETE	
324	3-563-514-00	FIBRE WASHER (B)	
325	A-7070-148-A	CONNECTOR BLOCK ASSY (A), EDGE	
326	A-7070-149-A	CONNECTOR BLOCK ASSY (B), EDGE	
327	3-695-410-01	SPRING	
328	*1-616-445-11	FP-7 FLEXIBLE BOARD	

5-8. HARDWARE LIST

SDREW

7-621-255-45 SCREW +P 2X6
7-621-772-10 SCREW +B 2X4
7-627-452-28 SCREW, PRECISION +K 2X4
7-627-553-18 SCREW, PRECISION +P 2X2
7-627-553-47 SCREW, PRECISION +P 2X4

7-627-553-48 SCREW, PRECISION +P 2X4
7-627-553-77 SCREW, PRECISION +P 2X10
7-627-850-08 SCREW, PRECISION +P 1.4X2
7-627-850-17 SCREW, PRECISION +P 1.4X2.5
7-627-852-03 SCREW, PRECISION +P 1.7X2.5

7-627-852-18 SCREW, PRECISION +P 1.7X4 TYPE3
7-627-852-38 SCREW, PRECISION +P1.7X1.8TYPE3
7-627-853-27 PRECISION SCREW +P 2X3 TYPE 3
7-685-104-14 SCREW +P 2X6 TYPE2 NON-SLIT
7-685-105-19 SCREW +P 2X8 TYPE2 NON-SLIT

7-685-134-19 SCREW +BTP 2.6X8 TYPE2 N-S

WASHER

7-623-951-11 WASHER 1.7, FIBER

STOP RING

7-624-101-01 STOP RING 1.2 (E TYPE)
7-624-102-04 STOP RING 1.5, TYPE -E

7-623-508-01 LUG,3

VC-4, 5, 6

SECTION 6
ELECTRICAL PARTS LIST

NOTE:

The components identified by shading and mark ⚠ are critical for safety. Replace only with part number specified.

When indicating parts by reference number, please include the board name.

- Due to standardization, replacements in the parts list may be different from the parts specified in the diagrams or the components used on the set.
- All variable and adjustable resistors have characteristic curve B, unless otherwise noted.

RESISTORS

- All resistors are in ohms
- F : nonflammable

- Items marked "*" are not stocked since they are seldom required for routine service. Some delay should be anticipated when ordering these items.

CAPACITORS

- MF : μF, PF : μμF

COILS

- MMH : mH, UH : μH

Ref.No	Part No.	Description		Remark
	*A-7060-287-A	B-654 (VC-4, 5, 6) CAMERA BOARD, COMPLETE **********		
	*A-7060-297-A	DT-60 BOARD, COMPLETE		
	*A-7060-082-A	MX-2 BOARD, COMPLETE		
	*A-7060-085-A	IA-1 BOARD, COMPLETE		
	*A-7060-087-A	SH-1 BOARD, COMPLETE		
	*A-7060-308-A	ED-11 BOARD, COMPLETE		
	*1-616-445-11	FP-7 FLEXIBLE, BOARD		
		CAPACITOR		
C681	1-135-083-00	TANTAL. CHIP 0.47MF	20%	25V
C682	1-135-083-00	TANTAL. CHIP 0.47MF	20%	25V
C683	1-135-083-00	TANTAL. CHIP 0.47MF	20%	25V
C684	1-135-083-00	TANTAL. CHIP 0.47MF	20%	25V
C685	1-135-083-00	TANTAL. CHIP 0.47MF	20%	25V
C686	1-135-083-00	TANTAL. CHIP 0.47MF	20%	25V
C687	1-135-083-00	TANTAL. CHIP 0.47MF	20%	25V
C696	1-124-229-00	ELECT 33MF	20%	10V
C697	1-163-077-00	CERAMIC CHIP 0.1MF		50V
C698	1-163-077-00	CERAMIC CHIP 0.1MF		50V
C699	1-124-234-00	ELECT 22MF	20%	16V
C700	1-163-021-00	CERAMIC CHIP 0.01MF	10%	50V
C701	1-163-021-00	CERAMIC CHIP 0.01MF	10%	50V
C702	1-124-234-00	ELECT 22MF	20%	16V
C703	1-163-021-00	CERAMIC CHIP 0.01MF	10%	50V
C704	1-124-234-00	ELECT 22MF	20%	16V
C705	1-124-234-00	ELECT 22MF	20%	16V
C706	1-163-021-00	CERAMIC CHIP 0.01MF	10%	50V
C707	1-163-021-00	CERAMIC CHIP 0.01MF	10%	50V
C708	1-124-222-00	ELECT 22MF	20%	6.3V
C709	1-131-388-00	TANTALUM 68MF	20%	6.3V
C710	1-163-021-00	CERAMIC CHIP 0.01MF	10%	50V
C711	1-163-099-00	CERAMIC CHIP 18PF	5%	50V
C712	1-163-109-00	CERAMIC CHIP 47PF	5%	50V
C713	1-163-109-00	CERAMIC CHIP 47PF	5%	50V
C714	1-163-021-00	CERAMIC CHIP 0.01MF	10%	50V
C715	1-135-097-21	TANTAL. CHIP 15MF	20%	10V
C716	1-163-115-00	CERAMIC CHIP 82PF	5%	50V
C717	1-163-115-00	CERAMIC CHIP 82PF	5%	50V
C734	1-163-081-00	CERAMIC CHIP 0.22MF		25V
C771	1-163-145-00	CERAMIC CHIP 0.0015MF	5%	50V
C772	1-163-101-00	CERAMIC CHIP 22PF	5%	50V
C773	1-163-111-00	CERAMIC CHIP 56PF	5%	50V
C774	1-163-141-00	CERAMIC CHIP 0.001MF	5%	50V
C775	1-163-133-00	CERAMIC CHIP 470PF	5%	50V
C776	1-163-021-00	CERAMIC CHIP 0.01MF	10%	50V
C777	1-163-077-00	CERAMIC CHIP 0.1MF		50V
C778	1-163-141-00	CERAMIC CHIP 0.001MF	10%	50V
C779	1-163-077-00	CERAMIC CHIP 0.1MF		50V
C780	1-163-077-00	CERAMIC CHIP 0.1MF		50V

Ref.No	Part No.	Description		Remark
C782	1-163-021-00	CERAMIC CHIP 0.01MF	10%	50V
C783	1-163-109-00	CERAMIC CHIP 47PF	5%	50V
C784	1-163-109-00	CERAMIC CHIP 47PF	5%	50V
C785	1-163-105-00	CERAMIC CHIP 33PF	5%	50V
C786	1-163-109-00	CERAMIC CHIP 47PF	5%	50V
C788	1-163-077-00	CERAMIC CHIP 0.1MF		50V
C789	1-163-077-00	CERAMIC CHIP 0.1MF		50V
C790	1-135-091-00	TANTAL. CHIP 1MF	20%	16V
C791	1-163-013-00	CERAMIC CHIP 0.0022MF	10%	50V
C792	1-163-013-00	CERAMIC CHIP 0.0022MF	10%	50V
C793	1-163-013-00	CERAMIC CHIP 0.0022MF	10%	50V
C794	1-163-117-00	CERAMIC CHIP 100PF	5%	50V
C801	1-163-077-00	CERAMIC CHIP 0.1MF		50V
C802	1-163-077-00	CERAMIC CHIP 0.1MF		50V
C803	1-163-013-00	CERAMIC CHIP 0.0022MF	10%	50V
C804	1-163-013-00	CERAMIC CHIP 0.0022MF	10%	50V
C805	1-163-013-00	CERAMIC CHIP 0.0022MF	10%	50V
C953	1-163-021-00	CERAMIC CHIP 0.01MF	10%	50V
C954	1-124-234-00	ELECT 22MF	20%	16V
C955	1-124-584-00	ELECT 100MF	20%	10V
C956	1-163-021-00	CERAMIC CHIP 0.01MF	10%	50V
C957	1-124-222-00	ELECT 22MF	20%	6.3V
C958	1-163-021-00	CERAMIC CHIP 0.01MF	10%	50V
C959	1-163-021-00	CERAMIC CHIP 0.01MF	10%	50V
C960	1-124-225-00	ELECT 100MF	20%	6.3V
C961	1-124-225-00	ELECT 100MF	20%	6.3V
C962	1-163-021-00	CERAMIC CHIP 0.01MF	10%	50V
C963	1-163-021-00	CERAMIC CHIP 0.01MF	10%	50V
C964	1-163-021-00	CERAMIC CHIP 0.01MF	10%	50V
C965	1-163-141-00	CERAMIC CHIP 0.001MF	10%	50V
C966	1-163-021-00	CERAMIC CHIP 0.01MF	10%	50V
C967	1-135-096-21	TANTAL. CHIP 4.7MF	20%	10V
C968	1-135-092-21	TANTAL. CHIP 3.3MF	20%	16V
C969	1-135-101-21	TANTAL. CHIP 22MF	20%	6.3V
		CONNECTOR		
CN951	*1-564-014-00	PIN, CONNECTOR 4P		
		TRIMMER		
CT771	1-141-331-51	CAP, VAR, TRIMMER (CHIP)		
		DIODE		
D771	8-712-500-00	DIODE 1T25-0		
D772	8-719-100-03	DIODE 1S2835-T2		
D951	8-719-104-27	DIODE 1S2837-T2		
		DELAY LINE		
DL951	1-415-448-11	DELAY LINE		
		LOW PASS FILTER		
FL801	1-235-442-11	FILTER, LOW PASS (YH)		
FL952	1-409-409-11	COIL, TRAP		

VC-4, 5, 6

Ref.No	Part No.	Description	Remark
		IC	
IC681	8-750-010-21	IC IC IU021-KAA	
IC771	8-752-320-63	IC CXD1011Q-T1	
IC801	8-759-914-44	IC TL431CLPB	
		COIL	
L681	1-408-960-21	MICRO INDUCTOR 1.5UH	
L682	1-408-960-21	MICRO INDUCTOR 1.5UH	
L683	1-407-165-XX	MICRO INDUCTOR 47UH	
L684	1-407-165-XX	MICRO INDUCTOR 47UH	
L685	1-408-740-00	INDUCTOR CHIP 10UH	
L771	1-408-837-00	INDUCTOR CHIP 68UH	
L801	1-408-730-11	INDUCTOR CHIP 1.5UH	
L802	1-410-337-11	MICRO INDUCTOR 1UH	
L803	1-410-337-11	MICRO INDUCTOR 1UH	
L804	1-410-337-11	MICRO INDUCTOR 1UH	
L805	1-408-730-11	INDUCTOR CHIP 1.5UH	
L952	1-407-165-XX	MICRO INDUCTOR 47UH	
L953	1-407-165-XX	MICRO INDUCTOR 47UH	
		TRANSISTOR	
Q681	8-729-100-66	TRANSISTOR 2SC1623-T2L6	
Q682	8-729-102-06	TRANSISTOR 2SC2223	
Q683	8-729-102-06	TRANSISTOR 2SC2223	
Q771	8-729-100-76	TRANSISTOR 2SA812	
Q772	8-729-100-66	TRANSISTOR 2SC1623	
Q773	8-729-100-76	TRANSISTOR 2SA812	
Q801	8-729-100-66	TRANSISTOR 2SC1623	
Q802	8-729-100-76	TRANSISTOR 2SA812	
Q951	8-729-100-66	TRANSISTOR 2SC1623	
Q952	8-729-100-66	TRANSISTOR 2SC1623	
Q953	8-729-100-66	TRANSISTOR 2SC1623	
Q954	8-729-100-66	TRANSISTOR 2SC1623	
Q955	8-729-100-76	TRANSISTOR 2SA812	
Q956	8-729-100-66	TRANSISTOR 2SC1623	
		RESISTOR	
R681	1-216-075-00	METAL CHIP 12K 5% 1/10W	
R682	1-216-089-00	METAL CHIP 47K 5% 1/10W	
R683	1-216-075-00	METAL CHIP 12K 5% 1/10W	
R684	1-216-091-00	METAL CHIP 56K 5% 1/10W	
R685	1-216-089-00	METAL CHIP 47K 5% 1/10W	
R686	1-216-067-00	METAL CHIP 5.6K 5% 1/10W	
R687	1-216-025-00	METAL CHIP 100 5% 1/10W	
R688	1-216-067-00	METAL CHIP 5.6K 5% 1/10W	
R689	1-216-061-00	METAL CHIP 3.3K 5% 1/10W	
R698	1-216-071-00	METAL CHIP 8.2K 5% 1/10W	
R699	1-216-061-00	METAL CHIP 3.3K 5% 1/10W	
R700	1-216-039-00	METAL CHIP 390 5% 1/10W	
R701	1-216-041-00	METAL CHIP 470 5% 1/10W	
R702	1-216-083-00	METAL CHIP 27K 5% 1/10W	
R704	1-216-041-00	METAL CHIP 470 5% 1/10W	

Ref.No	Part No.	Description	Remark
R771	1-216-065-00	METAL CHIP 4.7K 5% 1/10W	
R772	1-216-061-00	METAL CHIP 3.3K 5% 1/10W	
R773	1-216-061-00	METAL CHIP 3.3K 5% 1/10W	
R774	1-216-065-00	METAL CHIP 4.7K 5% 1/10W	
R775	1-216-061-00	METAL CHIP 3.3K 5% 1/10W	
R776	1-216-061-00	METAL CHIP 3.3K 5% 1/10W	
R777	1-216-071-00	METAL CHIP 8.2K 5% 1/10W	
R778	1-216-069-00	METAL CHIP 6.8K 5% 1/10W	
R779	1-216-085-00	METAL CHIP 33K 5% 1/10W	
R780	1-216-073-00	METAL CHIP 10K 5% 1/10W	
R781	1-216-073-00	METAL CHIP 10K 5% 1/10W	
R782	1-216-049-00	METAL CHIP 1K 5% 1/10W	
R783	1-216-033-00	METAL CHIP 220 5% 1/10W	
R784	1-216-049-00	METAL CHIP 1K 5% 1/10W	
R785	1-216-067-00	METAL CHIP 5.6K 5% 1/10W	
R786	1-216-085-00	METAL CHIP 33K 5% 1/10W	
R787	1-216-061-00	METAL CHIP 3.3K 5% 1/10W	
R789	1-216-295-00	METAL CHIP 0 5% 1/10W	
R790	1-216-121-00	METAL CHIP 1M 5% 1/10W	
R791	1-216-069-00	METAL CHIP 6.8K 5% 1/10W	
R792	1-216-069-00	METAL CHIP 6.8K 5% 1/10W	
R793	1-216-057-00	METAL CHIP 2.2K 5% 1/10W	
R794	1-216-065-00	METAL CHIP 4.7K 5% 1/10W	
R795	1-216-061-00	METAL CHIP 3.3K 5% 1/10W	
R796	1-216-057-00	METAL CHIP 2.2K 5% 1/10W	
R797	1-216-063-00	METAL CHIP 3.9K 5% 1/10W	
R798	1-216-067-00	METAL CHIP 5.6K 5% 1/10W	
R801	1-216-081-00	METAL CHIP 22K 5% 1/10W	
R802	1-216-077-00	METAL CHIP 15K 5% 1/10W	
R803	1-216-063-00	METAL CHIP 3.9K 5% 1/10W	
R804	1-216-071-00	METAL CHIP 8.2K 5% 1/10W	
R805	1-216-091-00	METAL CHIP 56K 5% 1/10W	
R806	1-216-081-00	METAL CHIP 22K 5% 1/10W	
R807	1-216-093-00	METAL CHIP 68K 5% 1/10W	
R808	1-216-099-00	METAL CHIP 120K 5% 1/10W	
R809	1-216-075-00	METAL CHIP 12K 5% 1/10W	
R810	1-216-059-00	METAL CHIP 2.7K 5% 1/10W	
R811	1-216-077-00	METAL CHIP 15K 5% 1/10W	
R812	1-216-081-00	METAL CHIP 22K 5% 1/10W	
R813	1-216-047-00	METAL CHIP 820 5% 1/10W	
R814	1-216-069-00	METAL CHIP 6.8K 5% 1/10W	
R815	1-216-081-00	METAL CHIP 22K 5% 1/10W	
R816	1-216-069-00	METAL CHIP 6.8K 5% 1/10W	
R817	1-216-081-00	METAL CHIP 22K 5% 1/10W	
R818	1-216-067-00	METAL CHIP 5.6K 5% 1/10W	
R819	1-216-067-00	METAL CHIP 5.6K 5% 1/10W	
R952	1-216-295-00	METAL CHIP 0 5% 1/10W	
R956	1-216-295-00	METAL CHIP 0 5% 1/10W	
R957	1-216-053-00	METAL CHIP 1.5K 5% 1/10W	
R958	1-216-047-00	METAL CHIP 820 5% 1/10W	
R959	1-216-055-00	METAL CHIP 1.8K 5% 1/10W	
R960	1-216-057-00	METAL CHIP 2.2K 5% 1/10W	
R961	1-216-059-00	METAL CHIP 2.7K 5% 1/10W	
R962	1-216-087-00	METAL CHIP 39K 5% 1/10W	
R963	1-216-079-00	METAL CHIP 18K 5% 1/10W	
R964	1-216-079-00	METAL CHIP 18K 5% 1/10W	

When indicating parts by reference number, please include the board name.

VC-4, 5, 6 | MD-10

Ref.No	Part No.	Description			Remark
R965	1-216-081-00	METAL CHIP	22K	5% 1/10W	
R966	1-216-065-00	METAL CHIP	4.7K	5% 1/10W	
R967	1-216-059-00	METAL CHIP	2.7K	5% 1/10W	
R968	1-216-041-00	METAL CHIP	470	5% 1/10W	
R969	1-216-121-00	METAL CHIP	1M	5% 1/10W	
R970	1-216-073-00	METAL CHIP	10K	5% 1/10W	
R971	1-216-073-00	METAL CHIP	10K	5% 1/10W	
R972	1-216-073-00	METAL CHIP	10K	5% 1/10W	
R973	1-216-079-00	METAL CHIP	18K	5% 1/10W	
R974	1-216-069-00	METAL CHIP	6.8K	5% 1/10W	
R975	1-216-069-00	METAL CHIP	6.8K	5% 1/10W	
		VARIABLE RESISTOR			
RV801	1-230-523-11	RES, ADJ, METAL GLAZE 10K			
RV802	1-230-523-11	RES, ADJ, METAL GLAZE 10K			
		SWITCH			
SW801	1-570-330-11	SWITCH, SLIDE			
		CRYSTAL			
X681	1-567-507-21	VIBRATOR, CRYSTAL			
**********					
	*A-7060-292-A	MD-10 BOARD, COMPLETE			
		**********			
	A-7060-090-A	AU-16 BOARD, COMPLETE			
	A-7060-091-A	YM-2 BOARD, COMPLETE			
	A-7060-092-A	RP-29 BOARD, COMPLETE			
	A-7060-293-A	SV-16 BOARD, COMPLETE			
	3-695-411-01	HOLDER (B), LED			
	3-697-570-01	SPRING (MD)			
		CAPACITOR			
C001	1-163-013-00	CERAMIC CHIP	0.0022MF	10% 50V	
C002	1-163-255-00	CERAMIC CHIP	150PF	5% 50V	
C003	1-130-471-00	MYLAR	0.001MF	5% 50V	
C004	1-163-022-00	CERAMIC CHIP	0.012MF	10% 50V	
C005	1-163-015-00	CERAMIC CHIP	0.0033MF	10% 50V	
C006	1-124-253-00	ELECT	0.47MF	20% 50V	
C007	1-135-096-21	TANTAL. CHIP	4.7MF	20% 10V	
C050	1-163-141-00	CERAMIC CHIP	0.001MF	10% 50V	
C051	1-102-116-00	CERAMIC	680PF	10% 50V	
C052	1-163-114-00	CERAMIC CHIP	75PF	5% 50V	
C101	1-135-096-21	TANTAL. CHIP	4.7MF	20% 10V	
C102	1-163-077-00	CERAMIC CHIP	0.1MF	50V	
C103	1-163-035-00	CERAMIC CHIP	0.047MF	50V	
C104	1-163-015-00	CERAMIC CHIP	0.0033MF	10% 50V	
C105	1-163-169-00	CERAMIC CHIP	33PF	5% 50V	
C106	1-163-169-00	CERAMIC CHIP	33PF	5% 50V	
C107	1-163-021-00	CERAMIC CHIP	0.01MF	10% 50V	
C108	1-163-021-00	CERAMIC CHIP	0.01MF	10% 50V	
C110	1-163-021-00	CERAMIC CHIP	0.01MF	10% 50V	
C111	1-163-021-00	CERAMIC CHIP	0.01MF	10% 50V	
C112	1-163-081-00	CERAMIC CHIP	0.22MF	25V	
C113	1-135-096-21	TANTAL. CHIP	4.7MF	20% 10V	
C114	1-163-033-00	CERAMIC CHIP	0.022MF	50V	

Ref.No	Part No.	Description			Remark
C115	1-163-033-00	CERAMIC CHIP	0.022MF	50V	
C116	1-163-033-00	CERAMIC CHIP	0.022MF	50V	
C117	1-163-033-00	CERAMIC CHIP	0.022MF	50V	
C118	1-124-245-00	ELECT	4.7MF	20% 16V	
C119	1-163-013-00	CERAMIC CHIP	0.0022MF	10% 50V	
C120	1-124-245-00	ELECT	4.7MF	20% 16V	
C121	1-163-005-00	CERAMIC CHIP	470PF	10% 50V	
C122	1-163-005-00	CERAMIC CHIP	470PF	10% 50V	
C123	1-163-125-00	CERAMIC CHIP	220PF	10% 50V	
C125	1-135-083-00	TANTAL. CHIP	0.47MF	20% 25V	
C130	1-124-271-00	ELECT	1MF	20% 50V	
C205	1-135-096-21	TANTAL. CHIP	4.7MF	20% 10V	
C207	1-124-233-00	ELECT	10MF	20% 16V	
C211	1-163-137-00	CERAMIC CHIP	680PF	5% 50V	
C212	1-163-021-00	CERAMIC CHIP	0.01MF	10% 50V	
C213	1-135-091-00	TANTAL. CHIP	1MF	20% 16V	
C214	1-135-092-21	TANTAL. CHIP	3.3MF	20% 16V	
C215	1-163-077-00	CERAMIC CHIP	0.1MF	50V	
C216	1-135-095-00	TANTAL. CHIP	1.5MF	10V 16V	
C217	1-135-096-21	TANTAL. CHIP	4.7MF	20% 10V	
C218	1-135-096-21	TANTAL. CHIP	4.7MF	20% 10V	
C219	1-131-371-00	TANTALUM	10MF	20% 16V	
C220	1-135-091-00	TANTAL. CHIP	1MF	20% 16V	
C221	1-135-091-00	TANTAL. CHIP	1MF	20% 16V	
C222	1-135-083-00	TANTAL. CHIP	0.47MF	20% 25V	
C223	1-124-236-00	ELECT	47MF	20% 10V	
C224	1-163-077-00	CERAMIC CHIP	0.1MF	50V	
C225	1-124-577-11	ELECT	82MF	20% 10V	
C226	1-124-577-11	ELECT	82MF	20% 10V	
C227	1-163-077-00	CERAMIC CHIP	0.1MF	50V	
C228	1-163-077-00	CERAMIC CHIP	0.1MF	50V	
C230	1-124-234-00	ELECT	22MF	20% 16V	
C231	1-124-275-00	ELECT	2.2MF	20% 35V	
C232	1-163-021-00	CERAMIC CHIP	0.01MF	10% 50V	
C233	1-136-017-00	CERAMIC CHIP	0.0047MF	50V	
C234	1-163-035-00	CERAMIC CHIP	0.047MF	50V	
C235	1-124-577-11	ELECT	82MF	20% 10V	
C236	1-124-596-11	ELECT	27MF	20% 16V	
C237	1-124-596-11	ELECT	27MF	20% 16V	
C238	1-124-596-11	ELECT	27MF	20% 16V	
C239	1-135-096-21	TANTAL. CHIP	4.7MF	20% 10V	
C244	1-135-096-21	TANTAL. CHIP	4.7MF	20% 10V	
C245	1-163-809-91	CERAMIC CHIP	0.047MF	10% 25V	
C246	1-163-075-00	CERAMIC CHIP	0.047MF	10% 25V	
C247	1-163-075-00	CERAMIC CHIP	0.047MF	10% 25V	
C248	1-135-096-21	TANTAL. CHIP	4.7MF	20% 10V	
C249	1-163-023-00	CERAMIC CHIP	0.015MF	10% 50V	
C250	1-163-035-00	CERAMIC CHIP	0.047MF	50V	
C401	1-163-141-00	CERAMIC CHIP	0.001MF	10% 50V	
C409	1-124-225-00	ELECT	100MF	20% 6.3V	
C411	1-124-233-00	ELECT	10MF	20% 6.3V	
C414	1-124-225-00	ELECT	100MF	20% 6.3V	

When indicating parts by reference number, please include the board name.

Ref.No	Part No.	Description			Remark
C429	1-124-225-00	ELECT	100MF	20%	6.3V
C430	1-124-225-00	ELECT	100MF	20%	6.3V
C434	1-124-224-00	ELECT	47MF	20%	6.3V
C440	1-124-225-00	ELECT	100MF	20%	6.3V
C573	1-163-021-00	CERAMIC CHIP	0.01MF		50V
C574	1-163-021-00	CERAMIC CHIP	0.01MF		50V
C575	1-163-111-00	CERAMIC CHIP	56PF	5%	50V
C576	1-163-119-00	CERAMIC CHIP	120P	5%	50V
C577	1-163-034-00	CERAMIC CHIP	0.033MF		50V
C578	1-163-021-00	CERAMIC CHIP	0.01MF		50V
C591	1-163-021-00	CERAMIC CHIP	0.01MF	10%	50V
C600	1-163-077-00	CERAMIC CHIP	0.1MF		50V
		CONNECTOR			
CN201	*1-564-014-00	PIN, CONNECTOR 4P			
CN202	*1-506-483-21	PIN, CONNECTOR 4P			
CN502	*1-506-485-11	PIN, CONNECTOR 6P			
CN503	*1-506-482-11	PIN, CONNECTOR 3P			
		DIODE			
D001	8-719-100-03	DIODE 1S2835			
D051	8-719-101-23	DIODE 1SS123			
D101	8-719-914-11	DIODE HZ4ALL			
D104	8-719-200-27	DIODE E10DS2			
D105	8-719-200-27	DIODE E10DS2			
D106	8-719-942-32	DIODE HZ3BLL			
D108	8-719-100-64	DIODE RD12EB1			
D110	8-719-951-12	DIODE HZ5BLL			
D111	8-719-927-98	DIODE PY2222S			
D112	8-719-907-53	DIODE AA2222S			
D117	8-719-927-97	DIODE PR2222S-B1-1			
D118	8-719-927-98	DIODE PY2222S			
D202	8-719-200-35	DIODE E10QS03			
D203	8-719-100-03	DIODE 1S2835			
D204	8-719-200-35	DIODE E10QS03			
D207	8-719-200-35	DIODE E10QS03			
		DELAY LINE			
DL501	1-235-576-11	Y-LPF			
DL502	1-415-443-11	Y-DL			
		IC			
IC001	8-759-100-95	IC UPC324G2-T1			
IC101	8-759-924-41	IC MB88501-405L			
IC102	8-759-922-73	IC TL022CPS			
IC202	8-759-202-45	IC CX20114			
IC204	8-752-003-60	IC CX20036			
		COIL			
L001	1-410-072-21	MICRO INDUCTOR 820UH			
L101	1-407-177-XX	MICRO INDUCTOR 470UH			
L201	1-408-785-21	INDUCTOR CHIP 47UH			
L203	1-410-126-11	COIL, CHOKE 200UH			
L204	1-410-125-11	COIL, CHOKE 100UH			

Ref.No	Part No.	Description	Remark
L205	1-410-126-11	COIL, CHOKE 200UH	
L207	1-407-165-XX	MICRO INDUCTOR 47UH	
L511	1-408-969-21	MICRO INDUCTOR 8.2UH	
L513	1-408-948-00	MICRO INDUCTOR 220UH	
		IC LINK	
PS101	⚠ 1-532-685-00	LINK, IC	
		TRANSISTOR	
Q001	8-729-100-66	TRANSISTOR 2SC1623	
Q002	8-729-901-06	TRANSISTOR DTA144EK	
Q003	8-729-100-76	TRANSISTOR 2SA812	
Q004	8-729-100-76	TRANSISTOR 2SA812	
Q005	8-729-901-01	TRANSISTOR DTC144EK	
Q050	8-729-100-66	TRANSISTOR 2SC1623	
Q051	8-729-312-22	TRANSISTOR 2SA1122C	
Q101	8-729-117-54	TRANSISTOR 2SA1175	
Q102	8-729-901-46	TRANSISTOR DTA114YK	
Q103	8-729-100-76	TRANSISTOR 2SA812	
Q104	8-729-101-07	TRANSISTOR 2SB798	
Q105	8-729-101-07	TRANSISTOR 2SB798	
Q106	8-729-100-76	TRANSISTOR 2SA812	
Q107	8-729-199-92	TRANSISTOR 2SD999	
Q108	8-729-199-92	TRANSISTOR 2SD999	
Q109	8-729-100-66	TRANSISTOR 2SC1623	
Q110	8-729-100-66	TRANSISTOR 2SC1623	
Q111	8-729-901-06	TRANSISTOR DTA144EK	
Q112	8-729-901-06	TRANSISTOR DTA144EK	
Q113	8-729-901-06	TRANSISTOR DTA144EK	
Q114	8-729-901-06	TRANSISTOR DTA144EK	
Q116	8-729-100-66	TRANSISTOR 2SC1623	
Q117	8-729-100-66	TRANSISTOR 2SC1623	
Q118	8-729-901-47	TRANSISTOR DTA143EK	
Q119	8-729-100-66	TRANSISTOR 2SC1623	
Q120	8-729-901-06	TRANSISTOR DTA144EK	
Q121	8-729-901-01	TRANSISTOR DTC144EK	
Q122	8-729-100-76	TRANSISTOR 2SA812	
Q123	8-729-100-76	TRANSISTOR 2SA812	
Q124	8-729-100-76	TRANSISTOR 2SA812	
Q125	8-729-100-76	TRANSISTOR 2SA812	
Q126	8-729-100-76	TRANSISTOR 2SA812	
Q127	8-729-100-76	TRANSISTOR 2SA812	
Q128	8-729-901-03	TRANSISTOR DTC144WK	
Q130	8-729-100-66	TRANSISTOR 2SC1623	
Q131	8-729-901-03	TRANSISTOR DTC144WK	
Q180	8-729-100-76	TRANSISTOR 2SA812	
Q181	8-729-101-07	TRANSISTOR 2SB798	
Q182	8-729-101-07	TRANSISTOR 2SB798	
Q183	8-729-100-76	TRANSISTOR 2SA812	
Q201	8-729-901-01	TRANSISTOR DTC144EK	
Q202	8-729-100-76	TRANSISTOR 2SA812	
Q207	8-729-100-66	TRANSISTOR 2SC1623	
Q208	8-729-100-76	TRANSISTOR 2SA812	

The components identified by shading and mark ⚠ are critical for safety. Replace only with part number specified.

When indicating parts by reference number, please include the board name.

MD-10

Ref.No	Part No.	Description	Remark
Q209	8-729-100-66	TRANSISTOR 2SC1623	
Q210	8-729-100-76	TRANSISTOR 2SA812	
Q211	8-729-105-29	TRANSISTOR 2SA1385	
Q212	8-729-105-29	TRANSISTOR 2SA1385	
Q213	8-729-100-66	TRANSISTOR 2SC1623	
Q216	8-729-901-01	TRANSISTOR DTC144EK	
Q217	8-729-901-01	TRANSISTOR DTC144EK	
Q218	8-729-100-76	TRANSISTOR 2SA812	
Q509	8-729-901-01	TRANSISTOR DTC144EK	
Q510	8-729-100-76	TRANSISTOR 2SA812	
Q511	8-729-117-54	TRANSISTOR 2SA1175	
Q512	8-729-900-99	TRANSISTOR DTA144WK	

RESISTOR

Ref.No	Part No.	Description			Remark
R001	1-216-093-00	METAL CHIP	68K	5% 1/10W	
R002	1-216-079-00	METAL CHIP	18K	5% 1/10W	
R003	1-216-061-00	METAL CHIP	3.3K	5% 1/10W	
R004	1-216-043-00	METAL CHIP	560	5% 1/10W	
R005	1-216-023-00	METAL CHIP	82	5% 1/10W	
R006	1-216-097-00	METAL CHIP	100K	5% 1/10W	
R007	1-216-097-00	METAL CHIP	100K	5% 1/10W	
R008	1-216-083-00	METAL CHIP	27K	5% 1/10W	
R009	1-216-075-00	METAL CHIP	12K	5% 1/10W	
R010	1-216-049-00	METAL CHIP	1K	5% 1/10W	
R011	1-216-121-00	METAL CHIP	1M	5% 1/10W	
R012	1-216-107-00	METAL CHIP	270K	5% 1/10W	
R013	1-216-073-00	METAL CHIP	10K	5% 1/10W	
R050	1-216-045-00	METAL CHIP	680	5% 1/10W	
R051	1-216-047-00	METAL CHIP	820	5% 1/10W	
R052	1-216-041-00	METAL CHIP	470	5% 1/10W	
R053	1-216-031-00	METAL CHIP	180	5% 1/10W	
R054	1-216-049-00	METAL CHIP	1K	5% 1/10W	
R055	1-216-073-00	METAL CHIP	10K	5% 1/10W	
R056	1-216-077-00	METAL CHIP	15K	5% 1/10W	
R089	1-216-103-00	METAL CHIP	180K	5% 1/10W	
R090	1-216-053-00	METAL CHIP	1.5K	5% 1/10W	
R091	1-216-045-00	METAL CHIP	680	5% 1/10W	
R092	1-216-087-00	METAL CHIP	39K	5% 1/10W	
R093	1-216-087-00	METAL CHIP	39K	5% 1/10W	
R094	1-216-304-11	METAL CHIP	3.3	5% 1/10W	
R095	1-216-304-11	METAL CHIP	3.3	5% 1/10W	
R096	1-216-304-11	METAL CHIP	3.3	5% 1/10W	
R097	1-216-304-11	METAL CHIP	3.3	5% 1/10W	
R098	1-216-021-00	METAL CHIP	68	5% 1/10W	
R101	1-216-085-00	METAL CHIP	33K	5% 1/10W	
R102	1-216-061-00	METAL CHIP	3.3K	5% 1/10W	
R103	1-216-067-00	METAL CHIP	5.6K	5% 1/10W	
R105	1-216-085-00	METAL CHIP	33K	5% 1/10W	
R106	1-216-077-00	METAL CHIP	15K	5% 1/10W	
R107	1-216-089-00	METAL CHIP	47K	5% 1/10W	
R108	1-216-077-00	METAL CHIP	15K	5% 1/10W	
R109	1-216-061-00	METAL CHIP	3.3K	5% 1/10W	
R110	1-216-041-00	METAL CHIP	470	5% 1/10W	
R111	1-216-089-00	METAL CHIP	47K	5% 1/10W	
R112	1-216-061-00	METAL CHIP	3.3K	5% 1/10W	

Ref.No	Part No.	Description			Remark
R113	1-216-089-00	METAL CHIP	47K	5% 1/10W	
R114	1-216-077-00	METAL CHIP	15K	5% 1/10W	
R115	1-216-041-00	METAL CHIP	470	5% 1/10W	
R116	1-216-089-00	METAL CHIP	47K	5% 1/10W	
R117	1-216-067-00	METAL CHIP	5.6K	5% 1/10W	
R118	1-216-067-00	METAL CHIP	5.6K	5% 1/10W	
R120	1-216-091-00	METAL CHIP	56K	5% 1/10W	
R121	1-216-073-00	METAL CHIP	10K	5% 1/10W	
R122	1-216-065-00	METAL CHIP	4.7K	5% 1/10W	
R123	1-216-097-00	METAL CHIP	100K	5% 1/10W	
R124	1-216-097-00	METAL CHIP	100K	5% 1/10W	
R125	1-216-097-00	METAL CHIP	100K	5% 1/10W	
R126	1-216-097-00	METAL CHIP	100K	5% 1/10W	
R127	1-216-073-00	METAL CHIP	10K	5% 1/10W	
R128	1-216-073-00	METAL CHIP	10K	5% 1/10W	
R129	1-216-057-00	METAL CHIP	2.2K	5% 1/10W	
R130	1-216-047-00	METAL CHIP	820	5% 1/10W	
R131	1-216-057-00	METAL CHIP	2.2K	5% 1/10W	
R132	1-216-047-00	METAL CHIP	820	5% 1/10W	
R133	1-216-105-00	METAL CHIP	220K	5% 1/10W	
R134	1-216-079-00	METAL CHIP	18K	5% 1/10W	
R135	1-216-047-00	METAL CHIP	820	5% 1/10W	
R136	1-216-047-00	METAL CHIP	820	5% 1/10W	
R137	1-216-073-00	METAL CHIP	10K	5% 1/10W	
R138	1-216-089-00	METAL CHIP	47K	5% 1/10W	
R139	1-216-091-00	METAL CHIP	56K	5% 1/10W	
R140	1-216-041-00	METAL CHIP	470	5% 1/10W	
R141	1-216-017-00	METAL CHIP	47	5% 1/10W	
R142	1-216-095-00	METAL CHIP	82K	5% 1/10W	
R143	1-216-081-00	METAL CHIP	22K	5% 1/10W	
R144	1-216-099-00	METAL CHIP	120K	5% 1/10W	
R145	1-216-095-00	METAL CHIP	82K	5% 1/10W	
R146	1-216-089-00	METAL CHIP	47K	5% 1/10W	
R147	1-216-091-00	METAL CHIP	56K	5% 1/10W	
R148	1-216-071-00	METAL CHIP	8.2K	5% 1/10W	
R149	1-216-081-00	METAL CHIP	22K	5% 1/10W	
R150	1-216-081-00	METAL CHIP	22K	5% 1/10W	
R151	1-216-083-00	METAL CHIP	27K	5% 1/10W	
R152	1-216-101-00	METAL CHIP	150K	5% 1/10W	
R153	1-216-083-00	METAL CHIP	27K	5% 1/10W	
R154	1-216-121-00	METAL CHIP	1M	5% 1/10W	
R155	1-216-073-00	METAL CHIP	10K	5% 1/10W	
R156	1-216-097-00	METAL CHIP	100K	5% 1/10W	
R157	1-216-097-00	METAL CHIP	100K	5% 1/10W	
R158	1-216-097-00	METAL CHIP	100K	5% 1/10W	
R159	1-216-063-00	METAL CHIP	3.9K	5% 1/10W	
R160	1-216-047-00	METAL CHIP	820	5% 1/10W	
R161	1-216-105-00	METAL CHIP	220K	5% 1/10W	
R162	1-216-107-00	METAL CHIP	270K	5% 1/10W	
R163	1-216-107-00	METAL CHIP	270K	5% 1/10W	
R164	1-216-107-00	METAL CHIP	270K	5% 1/10W	
R165	1-216-107-00	METAL CHIP	270K	5% 1/10W	

When indicating parts by reference number, please include the board name.

Ref.No	Part No.	Description				Remark
R166	1-216-097-00	METAL CHIP	100K	5%	1/10W	
R167	1-216-097-00	METAL CHIP	100K	5%	1/10W	
R168	1-216-095-00	METAL CHIP	82K	5%	1/10W	
R169	1-216-097-00	METAL CHIP	100K	5%	1/10W	
R170	1-216-097-00	METAL CHIP	100K	5%	1/10W	
R171	1-216-073-00	METAL CHIP	10K	5%	1/10W	
R172	1-216-049-00	METAL CHIP	1K	5%	1/10W	
R173	1-216-017-00	METAL CHIP	47	5%	1/10W	
R174	1-216-041-00	METAL CHIP	470	5%	1/10W	
R175	1-216-023-00	METAL CHIP	82	5%	1/10W	
R176	1-216-107-00	METAL CHIP	270K	5%	1/10W	
R177	1-216-089-00	METAL CHIP	47K	5%	1/10W	
R178	1-216-081-00	METAL CHIP	22K	5%	1/10W	
R179	1-216-081-00	METAL CHIP	22K	5%	1/10W	
R180	1-216-073-00	METAL CHIP	10K	5%	1/10W	
R181	1-216-073-00	METAL CHIP	10K	5%	1/10W	
R182	1-216-073-00	METAL CHIP	10K	5%	1/10W	
R183	1-216-073-00	METAL CHIP	10K	5%	1/10W	
R185	1-216-089-00	METAL CHIP	47K	5%	1/10W	
R186	1-216-101-00	METAL CHIP	150K	5%	1/10W	
R187	1-216-113-00	METAL CHIP	470K	5%	1/10W	
R188	1-216-083-00	METAL CHIP	27K	5%	1/10W	
R189	1-216-107-00	METAL CHIP	270K	5%	1/10W	
R190	1-216-089-00	METAL CHIP	47K	5%	1/10W	
R191	1-216-089-00	METAL CHIP	47K	5%	1/10W	
R193	1-216-089-00	METAL CHIP	47K	5%	1/10W	
R194	1-216-111-00	METAL CHIP	390K	5%	1/10W	
R195	1-216-111-00	METAL CHIP	390K	5%	1/10W	
R196	1-216-067-00	METAL CHIP	5.6K	5%	1/10W	
R197	1-216-065-00	METAL CHIP	4.7K	5%	1/10W	
R198	1-216-067-00	METAL CHIP	5.6K	5%	1/10W	
R199	1-216-065-00	METAL CHIP	4.7K	5%	1/10W	
R206	1-216-049-00	METAL CHIP	1K	5%	1/10W	
R207	1-216-049-00	METAL CHIP	1K	5%	1/10W	
R208	1-216-073-00	METAL CHIP	10K	5%	1/10W	
R209	1-216-073-00	METAL CHIP	10K	5%	1/10W	
R210	1-216-085-00	METAL CHIP	33K	5%	1/10W	
R211	1-216-081-00	METAL CHIP	22K	5%	1/10W	
R212	1-216-073-00	METAL CHIP	10K	5%	1/10W	
R214	1-216-067-00	METAL CHIP	5.6K	5%	1/10W	
R215	1-216-047-00	METAL CHIP	820	5%	1/10W	
R223	1-216-077-00	METAL CHIP	15K	5%	1/10W	
R224	1-216-065-00	METAL CHIP	4.7K	5%	1/10W	
R225	1-216-065-00	METAL CHIP	4.7K	5%	1/10W	
R226	1-216-099-00	METAL CHIP	120K	5%	1/10W	
R227	1-216-097-00	METAL CHIP	100K	5%	1/10W	
R228	1-216-077-00	METAL CHIP	15K	5%	1/10W	
R229	1-216-081-00	METAL CHIP	22K	5%	1/10W	
R230	1-216-079-00	METAL CHIP	18K	5%	1/10W	
R231	1-216-073-00	METAL CHIP	10K	5%	1/10W	
R232	1-216-049-00	METAL CHIP	1K	5%	1/10W	
R233	1-216-101-00	METAL CHIP	150K	5%	1/10W	
R234	1-216-089-00	METAL CHIP	47K	5%	1/10W	
R235	1-216-025-00	METAL CHIP	100	5%	1/10W	
R236	1-216-041-00	METAL CHIP	470	5%	1/10W	
R237	1-216-085-00	METAL CHIP	33K	5%	1/10W	
R238	1-216-041-00	METAL CHIP	470	5%	1/10W	
R249	1-216-089-00	METAL CHIP	47K	5%	1/10W	
R252	1-216-089-00	METAL CHIP	47K	5%	1/10W	
R253	1-216-097-00	METAL CHIP	100K	5%	1/10W	
R254	1-216-071-00	METAL CHIP	8.2K	5%	1/10W	
R257	1-216-059-00	METAL CHIP	2.7K	5%	1/10W	
R258	1-216-091-00	METAL CHIP	56K	5%	1/10W	
R259	1-216-113-00	METAL CHIP	470K	5%	1/10W	
R260	1-216-057-00	METAL CHIP	2.2K	5%	1/10W	
R261	1-216-073-00	METAL CHIP	10K	5%	1/10W	
R262	1-216-049-00	METAL CHIP	1K	5%	1/10W	
R263	1-216-025-00	METAL CHIP	100	5%	1/10W	
R264	1-216-077-00	METAL CHIP	15K	5%	1/10W	
R265	1-216-077-00	METAL CHIP	15K	5%	1/10W	
R266	1-216-041-00	METAL CHIP	470	5%	1/10W	
R267	1-216-049-00	METAL CHIP	1K	5%	1/10W	
R268	1-216-069-00	METAL CHIP	6.8K	5%	1/10W	
R269	1-216-298-00	METAL CHIP	2.2	5%	1/10W	
R270	1-216-298-00	METAL CHIP	2.2	5%	1/10W	
R271	1-216-298-00	METAL CHIP	2.2	5%	1/10W	
R272	1-216-298-00	METAL CHIP	2.2	5%	1/10W	
R273	1-216-304-11	METAL CHIP	3.3	5%	1/10W	
R274	1-216-304-11	METAL CHIP	3.3	5%	1/10W	
R275	1-216-304-11	METAL CHIP	3.3	5%	1/10W	
R424	1-216-049-00	METAL CHIP	1K	5%	1/10W	
R529	1-216-053-00	METAL CHIP	1.5K	5%	1/10W	
R578	1-216-085-00	METAL CHIP	33K	5%	1/10W	
R579	1-216-081-00	METAL CHIP	22K	5%	1/10W	
R580	1-216-037-00	METAL CHIP	330	5%	1/10W	
R581	1-216-041-00	METAL CHIP	470	5%	1/10W	
R582	1-216-308-00	METAL CHIP	4.7	5%	1/10W	
R591	1-216-049-00	METAL CHIP	1K	5%	1/10W	
R592	1-216-059-00	METAL CHIP	2.7K	5%	1/10W	

VARIABLE RESISTOR

RV101	1-230-873-21	RES, ADJ, METAL GLAZE 47K
RV102	1-230-873-21	RES, ADJ, METAL GLAZE 47K
RV202	1-230-524-11	RES, ADJ, METAL GLAZE 22K
RV203	1-230-528-11	RES, ADJ, METAL GLAZE 220K
RV204	1-230-529-11	RES, ADJ, METAL GLAZE 470K

CRYSTAL

X101	1-567-192-11	OSCILLATOR, CERAMIC
X201	1-527-345-61	OSCILLATOR, CRYSTAL

****

When indicating parts by reference number, please include the board name.

FP-8 | FH-4 | FP-14 | ES-11 | FP-16

Ref.No	Part No.	Description	Remark
	*A-7060-205-A	FP-8 BOARD, COMPLETE	
		**********	
	3-695-634-01	HOLDER, LED	
		DIODE	
D001	8-719-928-24	DIODE EE-L106	
D002	8-719-801-55	TLP907-0	
		SWITCH	
S001	1-554-942-11	SWITCH, PUSH	

****

	*1-616-824-11	FH-4 BOARD	
		**********	
	3-695-436-01	PIN (A), CONTACT	
	3-695-437-01	PIN (B), CONTACT	
		CAPACITOR	
C001	1-123-321-00	ELECT 220MF 20% 16V	
		COIL	
L001	1-410-337-11	MICRO INDUCTOR 1UH	
L002	1-410-337-11	MICRO INDUCTOR 1UH	
L003	1-410-337-11	MICRO INDUCTOR 1UH	
		LINK, IC	
PS001	⚠1-532-840-21	LINK, IC	
PS002	⚠1-532-840-21	LINK, IC	
		RESISTOR	
R001	1-247-861-00	CARBON 18K 5% 1/6W	
		SWITCH	
S001	1-570-290-11	SWITCH, LEAF	

****

FP-14 FLEXIBLE, BOARD
****

		CAPACITOR	
C001	1-163-038-00	CERAMIC CHIP 0.1MF 25V	

****

Ref.No	Part No.	Description	Remark
		ES-11 BOARD	
		**********	
	*3-695-644-01	HOLDER, END SENSOR	
		TRANSISTOR	
Q001	8-729-804-28	SPS-103	

****

	1-616-450-11	FP-16 FLEXIBLE, BOARD	
		**********	
	3-695-654-01	HOLDER (A), LED	
		DIODE	
D113	8-719-927-99	DIODE PR2222S-C3	
D114	8-719-927-99	DIODE PR2222S-C3	
D115	8-719-928-00	DIODE PY2222S-C3	
D116	8-719-907-53	DIODE AA2222S-C3	

****

		MISCELLANEOUS	
		**********	
	1-464-519-11	CONVERTER UNIT, DC-DC	
	1-535-574-11	TERMINAL, SHAFT GROUND	
	1-547-187-11	OVF	
	1-547-188-11	LENS	
	1-547-190-11	IRIS, RING	
	1-558-160-12	SOCKET, CONNECTOR	
	1-807-238-11	SENSOR, DEW CONDENSATION	
	8-810-511-90	C-2009 SET (MIC)	
M901	A-7040-051-A	MOTOR BLOCK ASSY, LM	
M902	8-838-103-01	MOTOR, DC (BHF-3300A) (CAPSTAN)	
RV001	1-230-873-11	RES, ADJ, METAL GLAZE 47K	
S101	1-553-226-00	SWITCH, LEAF (EJECT SW)	
S102	1-554-669-00	SWITCH SLIDE SP/LP SW	
S901	1-553-198-00	SWITCH, LEAF (LENS DOOR SW)	
S902	1-553-226-00	SWITCH, LEAF (CCD SW)	

****

ACCESSORIES AND PACKING MATERIALS
****

Part No.	Description	Remark
*X-3686-754-1	INDIVIDUAL CARTON (LOWER) ASSY	
3-695-503-01	BELT, STRAP	
*3-699-405-21	INDIVIDUAL CARTON (FOR BLACK MODEL)	
*3-699-543-11	INDIVIDUAL CARTON (FOR SILVER MODEL)	
*3-703-669-03	CARD, CAUTION, FTZ	
3-760-735-13	MANVAL, INSTRUCTION (ENGLISH)	
3-760-735-42	MANUAL, INSTRUCTION (FRENCH, GERMAN, NETHERLANDISH) (AEP, E MODEL)	
3-760-735-52	MANUAL, INSTRUCTION (SPANISH, SWEDISH, ITALIAN) (AEP, E MODEL)	
3-760-735-61	MANUAL, INSTRUCTION (E MODEL)	
*3-695-761-01	SHEET, PROTECTION	
*3-695-746-01	CUSHION (UPPER)	

The components identified by shading and mark ⚠ are critical for safety. Replace only with part number specified.

When indicating parts by reference number, please include the board name.

ADJUSTMENT

File this supplement with the service manual.

SUBJECT: ADJUSTMENT

VIDEO

TABLE OF CONTENTS

Section	Title	Page
1.	CAMERA ADJUSTMENTS	
1-1.	List of Service Jigs	3
1-2.	Preparations	4
1-3.	Track Shifting and Monitoring Jig Connecting Procedure	5
1-4.	Setting up	13
1-5.	Items of Caution	14
1-6.	Servicing Locations	16
1-7.	Flange Back Adjustment	17
1-8.	Iris Setting Adjustment	17
1-9.	AGC Setting Adjustment	17
1-10.	G Pedestal Adjustment (1)	17
1-11.	G Gamma Adjustment	18
1-12.	White Clip Adjustment (1)	18
1-13.	G Pedestal Adjustment (2)	18
1-14.	RB Pedestal Adjustment	18
1-15.	MPX Adjustment	19
1-16.	Carrier Balance Adjustment	19
1-17.	G_1/G_2 Gain Adjustment	19
1-18.	RB_1/RB_2 Gain Adjustment	20
1-19.	Set-up Adjustment	20
1-20.	Y Level Adjustment	20
1-21.	Aperture Adjustment	20
1-22.	White Clip Adjustment (2)	21
1-23.	Max. Gain Adjustment	21
1-24.	White Balance Adjustment	21
1-25.	Burst Level Adjustment	22
1-26.	Burst Phase Adjustment	22
1-27.	Color Reproducibility Adjustment	22
1-28.	LLA Adjustment	23
2.	MECHANICAL ADJUSTMENT (VIDEO SECTION)	
2-1.	Preparation for Check, Adjustment and Replacement of the Mechanical Sections	24
2-1-1.	Cassette Arm Assembly	24
2-1-2.	LS Cassette Compartment Assembly	25
2-1-3.	Extracting Method with the Cassette Loading End State	26
2-1-4.	Cassette and Cassette Arm Assembly and Method to Operate the LS Cassette Compartment Assembly in the Removed State	28
2-1-5.	Handling of Mode Selector	29
2-2.	Periodic Check and Maintenance	32
2-2-1.	Cleaning of Rotary Drum Assembly	32
2-2-2.	Cleaning of Tape Path	32
2-2-3.	Cleaning of Drive System	32
2-2-4.	Periodic Check	33
2-2-5.	Service Jig Table	34
2-3.	Mechanical Check, Adjustment and Replacement	35
2-3-1.	Reel Lock Lever Assembly	35
2-3-2.	Pendulum Stopper Plate	36
2-3-3.	S Reel Table Assembly	37
2-3-4.	T Reel Table Assembly	38
2-3-5.	Pinch Arm B Assembly	39
2-3-6.	Pinch Arm C Assembly	40
2-3-7.	TG-1 Arm Assembly	41
2-3-8.	TG-1 Band Assembly	42
2-3-9.	Soft Brake Assembly	42
2-3-10.	LS Chassis Assembly	43
2-3-11.	TG-7 Assembly	44
2-3-12.	Pinch Arm A Assembly	45
2-3-13.	M Slider Assembly	46
2-3-14.	TG-4 Base Assembly and TG-5 Base Assembly	47
2-3-15.	Loading Slider T Assembly	48
2-3-16.	Loading Slider S Assembly	49
2-3-17.	Phase Adjustment	50
2-3-18.	Gear Train Operation Check	51
2-3-19.	FP-8 Board	52
2-3-20.	Cassette Compartment Lock Assembly	53
2-3-21.	LM Motor Assembly	54
2-3-22.	MD-10 Board	55
2-3-23.	Capstan Motor Assembly	56
2-3-24.	TG-2	57
2-3-25.	Drum Assembly	58
2-3-26.	Replacement of Rotary Upper Drum	59
2-3-27.	Reel Table Height Check	61
2-3-28.	Pinch Stroke Adjustment	61
2-3-29.	Soft Brake Torque Check	62
2-3-30.	FWD/RVS Torque Check	62
2-3-31.	Tension Regulator Position Adjustment	63
2-3-32.	FWD Back Tension Adjustment	64
2-4.	Tape Path Adjustment	65
2-4-1.	Preparations for Adjustment	65
2-4-2.	Rough Adjustment of Tracking	66
2-4-3.	Adjustment on the Inlet Side	67
2-4-4.	Adjustment on the Outlet Side	68
2-4-5.	Check after Adjustment	69
3.	VIDEO ADJUSTMENTS	70
3-1.	Ever 5 V Adjustment (MD-10 Board)	72
3-2.	System Control Adjustment	72
3-2-1.	Battery Down Adjustment (MD-10 Board)	72
3-2-2.	Tape End Detection Adjustment	72
3-3.	Servo System Adjustment	73
3-3-1.	Capstan DC Bias Adjustment (MD-10 Board)	73
3-3-2.	RF Switching Position Adjustment (MD-10 Board)	73
3-3-3.	ATF Recording Current Adjustment (RP-29 Board)	73
3-4.	Video System Adjustment	74
3-4-1.	Y FM Carrier Frequency Adjustment (YM-2 Board)	74
3-4-2.	Y FM Deviation Adjustment (YM-2 Board)	74
3-4-3.	AC Clip Adjustment (YM-2 Board)	75
3-4-4.	REC Y Recording Current Adjustment (RP-29 Board)	75
3-4-5a.	REC C Recording Current Adjustment (RP-29 Board)	76
3-4-5b.	REC C Recording Current Adjustment (Simplified Method)	76
3-5.	Audio System Adjustment	77
3-5-1.	AFM Carrier Frequency Adjustment (AU-16 Board)	77
3-5-2.	Carrier Level Check (AU-16 Board)	77
3-5-3.	Deviation Adjustment	77
3-5-4.	AFM Recording Current Adjustment (RP-29 Board)	78
3-5-5.	Noise Level Check	78
3-5-6.	Frequency Response Check	78
3-5-7.	AGC Check	78
3-5-8.	Distortion Check	78

1. CAMERA ADJUSTMENTS

PRE-ADJUSTMENT PREPARATIONS (CAMERA SECTION)

1-1. LIST OF SERVICE JIGS

- Oscilloscope
- Adjusting Screwdrivers
- Color Monitor
- L Wrenches

Ref. No.	Name	Part Code	Purpose
J-1	ND Filter 0.4	J-6080-806-A	LLA Adjustment
	ND Filter 1.0	J-6080-808-A	LLA Adjustment
	ND Filter 0.9	J-6080-833-A	Max. Gain Adjust. LLA Adjust
J-2	PTB-100 Pattern Box	J-6020-490-A	
J-3	Color Chart for Pattern Box	J-6020-250-A	
J-4	M8 Repair Bench	J-6080-847-A	
J-5	Iris Extension Cable (4P)	J-6080-846-A	
J-6	Track Shifting and Monitoring Jig	J-6080-851-A	
Have a below described jig prepared for yourselves. *High Luminance Pattern* 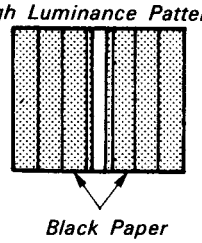 *Black Paper* *Cover Color-bar Chart J-3 with black paper except half the width of its white bar, for shooting in a standard pattern frame.*			White Clip Adjustment (2)

Fig. 1-1

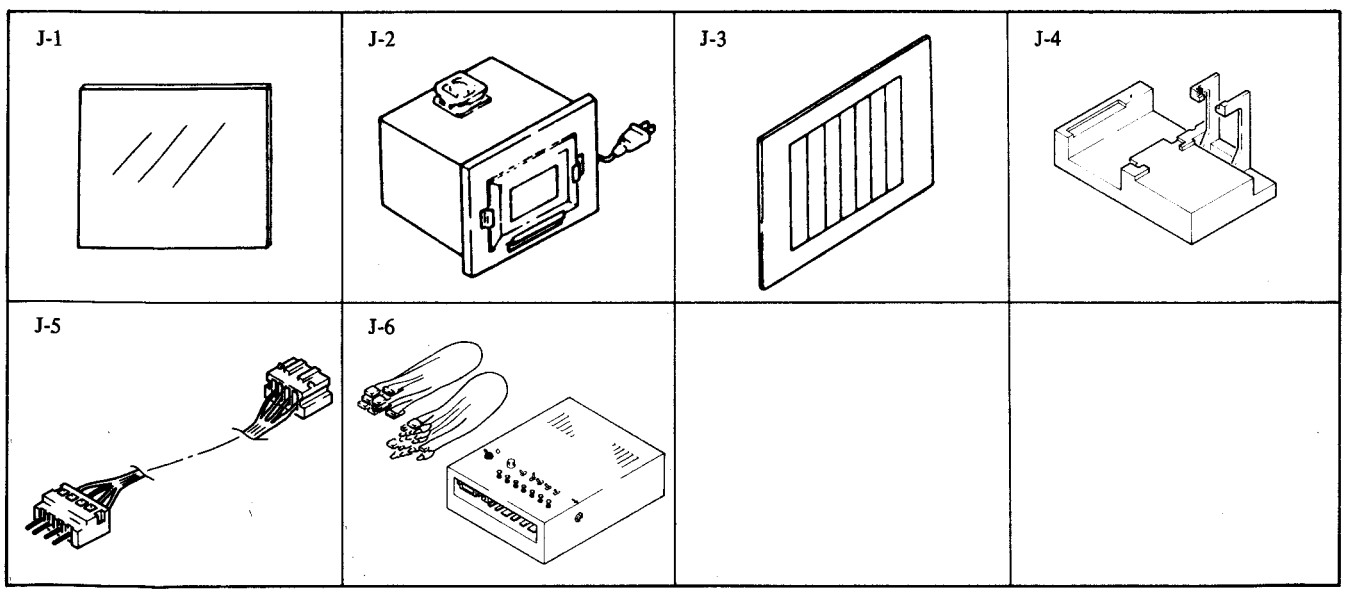

Fig. 1-2

1-2. PREPARATIONS

For the cabinet and individual boards dismounting process, refer to 2.

1) Set White Balance Switch at ☼ (indoors) unless otherwise specified.
2) Arrange for All White Pattern to make the entire Monitor Screen White.
3) For an All Black Image, fasten a piece of black paper with adhesive tapes or equivalent to cover the Lens front.

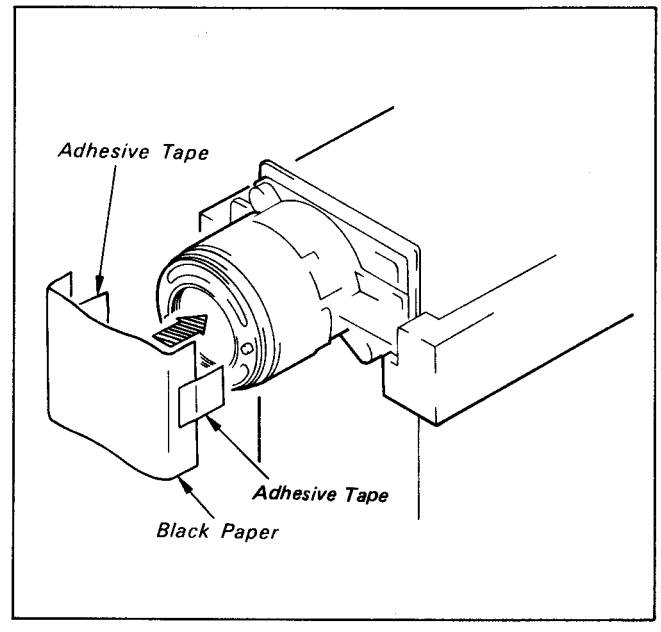

Fig. 1-3

4) Pull CN951 off VC-6 Board, and by connecting Extension Cable (4P) in between, set CCD-M8E on M8 Repair Bench. (See Fig. 1-4)

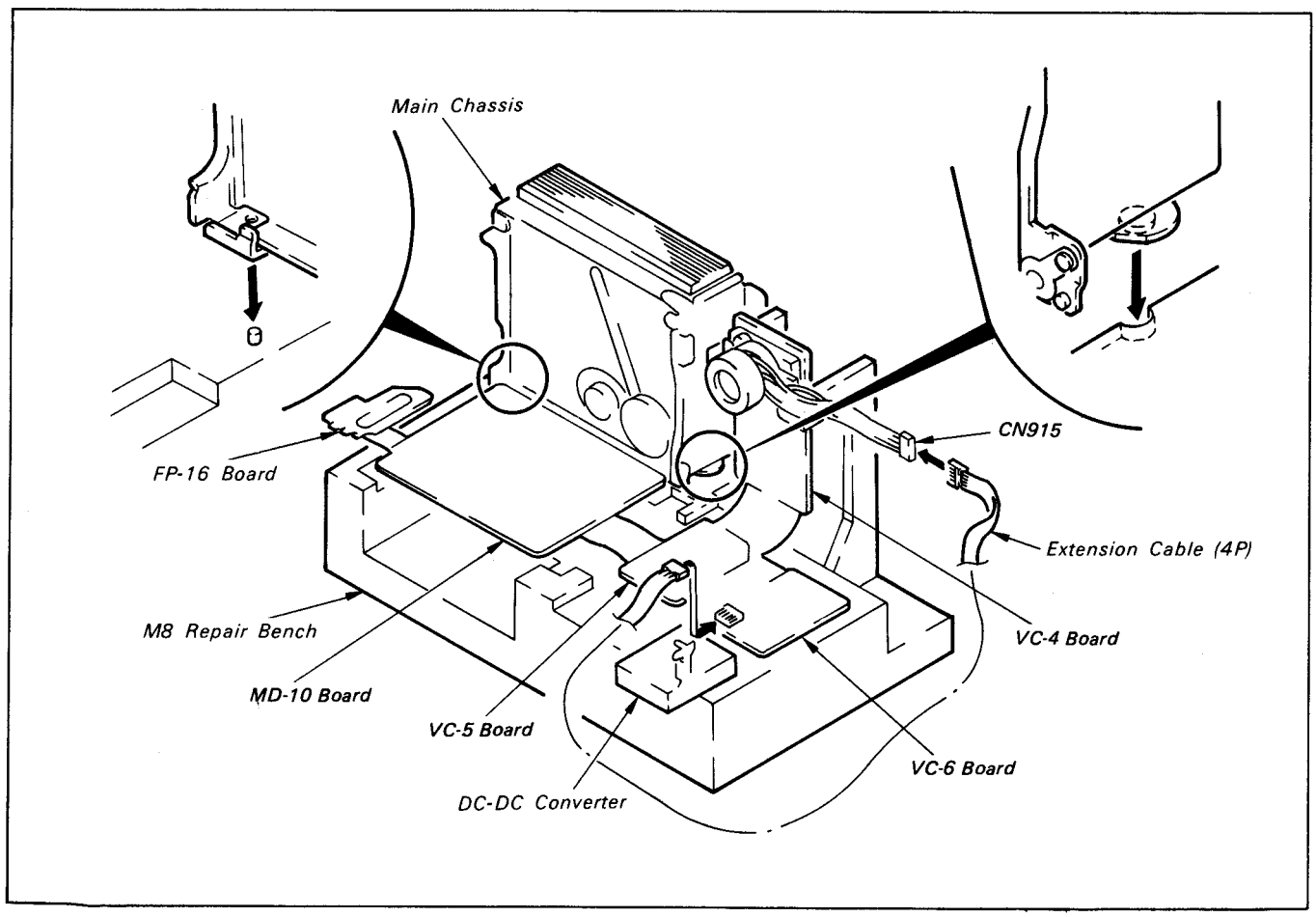

Fig. 1-4

1-3. TRACK SHIFTING AND MONITORING JIG CONNECTING PROCEDURE

1) Connection Diagram

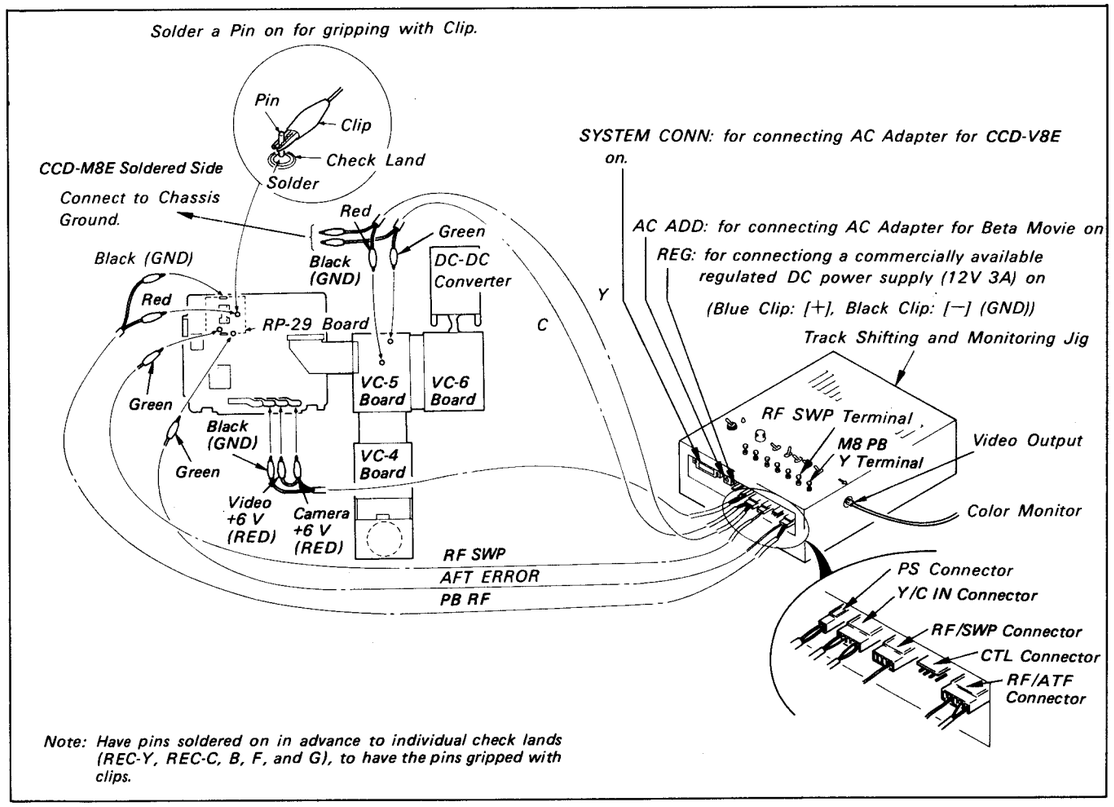

Note: Have pins soldered on in advance to individual check lands (REC-Y, REC-C, B, F, and G), to have the pins gripped with clips.

Fig. 1-5

i) Supply power to Power Supply Connector (PS IN) as follows (see Fig. 1-5):
SYSTEM CONN: Connect the AC-V8 series on that has been modified by paragraph 3) Modifying Procedure.
AC ADP: Connect an AC adapter for Beta Movie on.
REG: Connect a commercially available 12V 3A regulated DC power supply on.
Connect Blue Clip to its (+) positive end and Black Clip to its (−) negative end (GND), and operate it at about 8 V.

Note:

Priorities have been assigned to the three above connectors, where SYSTEM CONN carries the highest priority and REG the lowest.

Accordingly, even where they have been connected on together, power will be supplied to SYSTEM CONN.

ii) PS is the connector that supplies power to CCD-M8E. Connect one of its two red clips to the +B line of Camera, the other to that of Video Block, and its black clip to GND (see Fig. 1-5).

iii) Y/C is the connector for fetching luminance and chrominance signals from Camera. Connect its red clip to REC-Y on VC-5 Board, its green chip to REC-C, and its black clip to GND (see Fig. 1-5).

iv) RF/SWP is the connector for fetching just RF SWP in the case of CCD-M8E. Connect its green clip to check land B (RF SWP) on M-10 Board (see Fig. 1-5).

v) RF/ATF is the connector for fetching the PBY RF signal and supplying the ATF ERROR signal for track shifting. Connect its green clip to check land F on M-10 Board, its red clip to check land G , and its black clip to GND (see Fig. 1-5).

Note:

Connect the above GND to the shielding case of RP-29 board.

vi) Connect jack VIDEO OUT and VIDEO IN of Monitor together with a pin-jack cable.

2) Switch

Set switch VTR/CMR at VTR in a REC mode, or at CMR in a stand-by mode.

3) AC-V8 series (AC Adapter for CCD-V8E) Modifying Procedure

i) Remove two screws ❶ and two screws ❷, and dismount Upper Housing (see Fig. 1-6).

ii) Short pins (18) and (21) of IC5 on SB-F Board by soldering lead wire, etc.

iii) Mount Upper Housing back on, and tighten two screws ❶ and two screws ❷ (see Fig. 1-6).

Note:

- **When connecting AC-V8 series to Track Shifting and Monitoring Jig, be sure to modify it by the above steps in advance.**
- **When power is supplied with a modified AC-V8 series, a little time will be required for the supply voltage to drop after pushing the AC-V8 series switch off.**

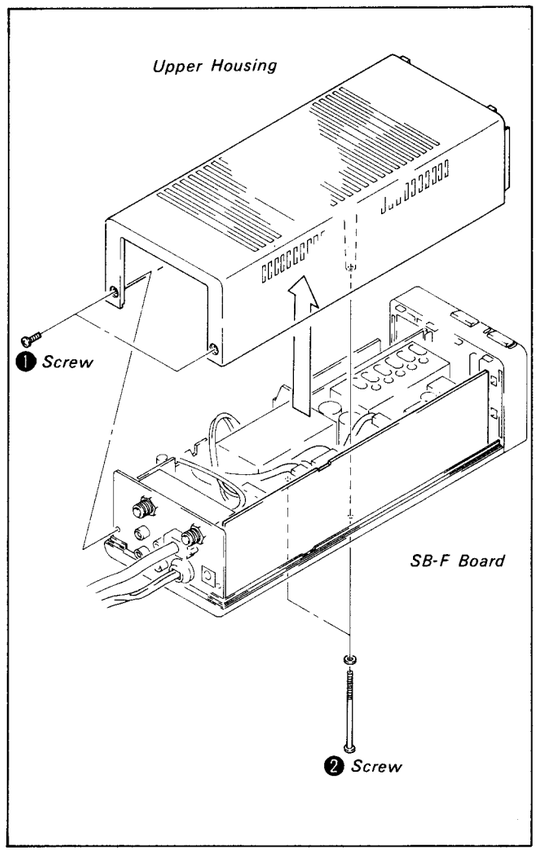

Fig. 1-6

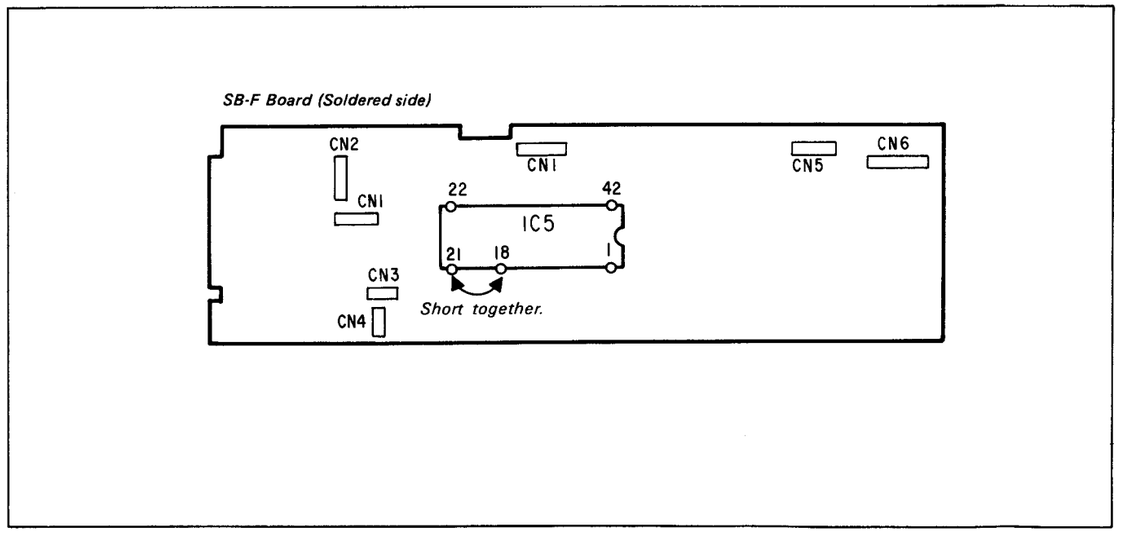

Fig. 1-7

4) Circuit Diagram of Track Shifting and Monitoring Jig

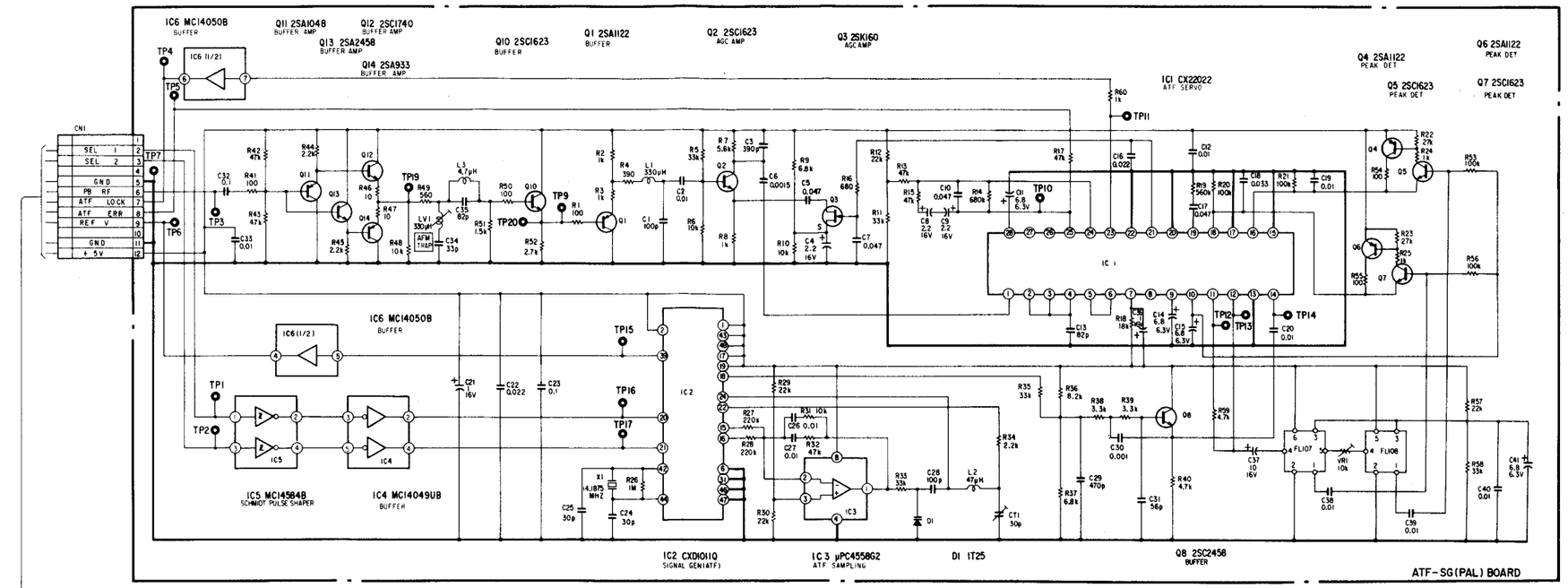

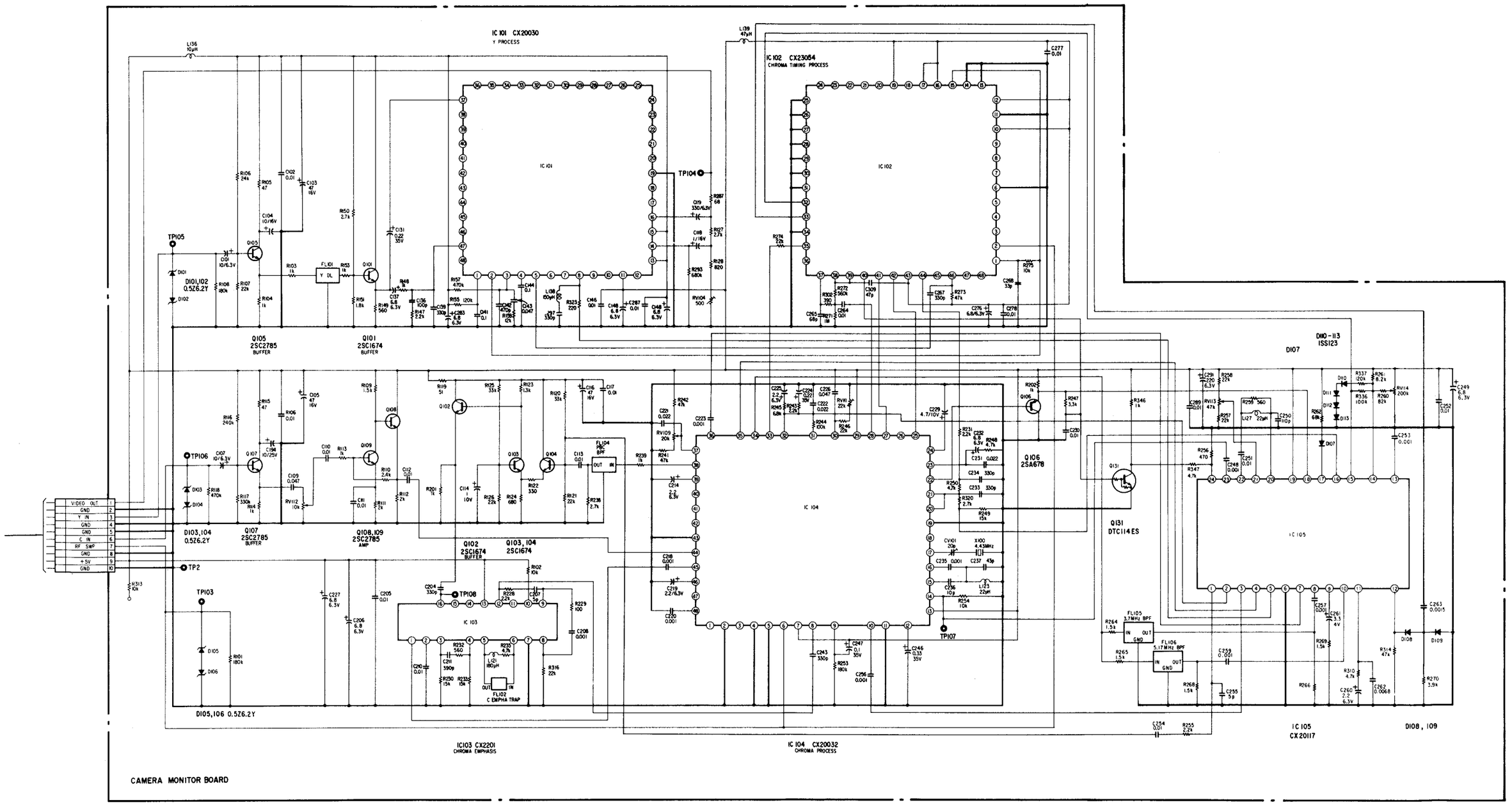
IC 101 CX20030
Y PROCESS
IC 102 CX23054
CHROMA TIMING PROCESS
IC 101
IC 102
IC 104
IC 103
IC 105
TP104
TP105
TP106
TP2
TP103
TP108
TP107
Q105
2SC2785
BUFFER
Q101
2SC1674
BUFFER
D101,102
0.5Z6.2Y
Q107
2SC2785
BUFFER
D103,104
0.5Z6.2Y
Q108,109
2SC2785
AMP
Q102
2SC1674
BUFFER
Q103, 104
2SC1674
D105,106 0.5Z6.2Y
Q106
2SA678
Q131
DTC114ES
D110-113
1SS123
D107
D108 , 109
FL101
Y DL
FL102
C EMPHA TRAP
FL104
PBC BPF
FL105
3.7MHz BPF
FL106
5.17MHz BPF
X100
4.43MHz
VIDEO OUT
GND
Y IN
GND
GND
C IN
RF SWP
GND
+5V
GND
IC103 CX22011
CHROMA EMPHASIS
IC 104 CX20032
CHROMA PROCESS
IC 105
CX20117
CAMERA MONITOR BOARD

5) Parts List of Track Shifting and Monitoring Jig

• CAMERA MONITOR BOARD

Ref. No.	Part No.	Description
		TRIMMER
CV101		TRIMMER, CAPACITOR 20PF
		DIODE
D100	8-719-100-38	DIODE 0.5Z6.2Y RD6.2EB2
D101	8-719-100-38	DIODE 0.5Z6.2Y RD6.2EB2
D103	8-719-100-38	DIODE 0.5Z6.2Y RD6.2EB2
D104	8-719-100-38	DIODE 0.5Z6.2Y RD6.2EB2
D105	8-719-100-38	DIODE 0.5Z6.2Y RD6.2EB2
D106	8-719-100-38	DIODE 0.5Z6.2Y RD6.2EB2
		FILTER
FL102	1-235-397-11	PBC BPF
FL105	1-409-386-11	CE TRAP
FL106	1-567-306-11	FILTER, CERAMIC 4.32MHz
		IC
IC101	8-752-003-00	IC CX20030
IC102	8-759-914-56	IC CX23054
IC103	8-752-202-10	IC CX22021
IC104	8-752-003-20	IC CX20032
		COIL
L118	1-408-983-21	MICRO INDUCTOR 120μH
L119	1-410-072-21	MICRO INDUCTOR 820μH
L120	1-408-983-21	MICRO INDUCTOR 120μH
L121	1-408-985-11	MICRO INDUCTOR 180μH
L122	1-408-976-21	MICRO INDUCTOR 33μH
L123	1-408-948-00	MICRO INDUCTOR 220μH
L124	1-408-978-21	MICRO INDUCTOR 47μH
L131	1-408-984-21	MICRO INDUCTOR 150μH
		TRANSISTOR
Q101	8-729-190-12	TRANSISTOR 2SC2901K
Q102	8-729-190-12	TRANSISTOR 2SC2901K
Q103	8-729-190-12	TRANSISTOR 2SC2901K
Q104	8-729-190-12	TRANSISTOR 2SC2901K
Q105	8-729-214-71	TRANSISTOR 2SK161GR
Q107	8-729-214-71	TRANSISTOR 2SK161GR
Q108	8-729-245-83	TRANSISTOR 2SC2785
Q109	8-729-245-83	TRANSISTOR 2SC2785

• TRACK SHIFT BOARD

Ref. No.	Part No.	Description
		CONNECTOR
CN1	1-564-030-11	CONNECTOR
CN2	1-564-029-11	CONNECTOR
CN3	1-564-029-31	CONNECTOR
CN4	1-564-030-41	CONNECTOR
CN5	1-564-027-11	CONNECTOR
CN6	1-564-027-11	CONNECTOR
CN7	1-507-886-00	DC JACK
CN8	1-562-582-11	CONNECTOR
CN9	1-507-945-11	CONNECTOR
CN10	1-560-900-11	CONNECTOR
CN11	1-560-898-11	CONNECTOR
		DIODE
D1	1-800-987-11	DIODE 3BZ61
D2	1-800-987-11	DIODE 3BZ61
D3	8-719-800-32	DIODE TLR143
		IC
IC1		IC TA7089P
IC2	8-759-171-05	IC μPC7805
IC3	8-759-902-21	IC SN74LS221
IC4	8-759-901-07	IC SN74LS107
		TRANSISTOR
Q1		TRANSISTOR 2SD716

• ATF-SG (PAL) BOARD

Ref. No.	Part No.	Description
		DIODE
D1	8-719-922-50	DIODE IT25
		FILTER
FL107	1-235-436-11	FILTER
FL108	1-235-435-11	FILTER
		IC
IC1	8-752-202-20	IC CX22022
IC2	8-752-320-29	IC CXD1011Q
IC3	8-759-145-58	IC μPC4558
IC4		IC MC14049UB
IC5		IC MC14584B
IC6		IC MC14050B
		COIL
L1	1-408-795-21	MICRO INDUCTOR 330μH
L2	1-408-785-21	MICRO INDUCTOR 47μH
L4	1-408-599-11	MICRO INDUCTOR 4.7μH
		VARIABLE COIL
LV3	1-459-548-11	COIL (VARIABLE) 330μH
		TRANSISTOR
Q1	8-729-312-22	TRANSISTOR 2SA1122
Q2	8-729-100-66	TRANSISTOR 2SC1623
Q3	8-729-116-04	TRANSISTOR 2SK160
Q4	8-729-312-22	TRANSISTOR 2SA1122
Q5	8-729-100-66	TRANSISTOR 2SC1623
Q6	8-729-312-22	TRANSISTOR 2SA1122
Q7	8-729-100-66	TRANSISTOR 2SC1623
Q8	8-729-245-83	TRANSISTOR 2SC2458
Q10	8-729-100-66	TRANSISTOR 2SC1623
Q11	8-729-612-77	TRANSISTOR 2SA1048
Q12	8-729-600-27	TRANSISTOR 2SC1740
Q13	8-729-245-83	TRANSISTOR 2SC2458
Q14	8-729-901-52	TRANSISTOR 2SA933
		CRYSTAL
X1	1-527-723-21	CRYSTAL 14.1875MHz

1-4. SETTING UP

1) Set CCD-M8E up as shown in Fig. 1-8, that has been set on M8 Repair Bench.

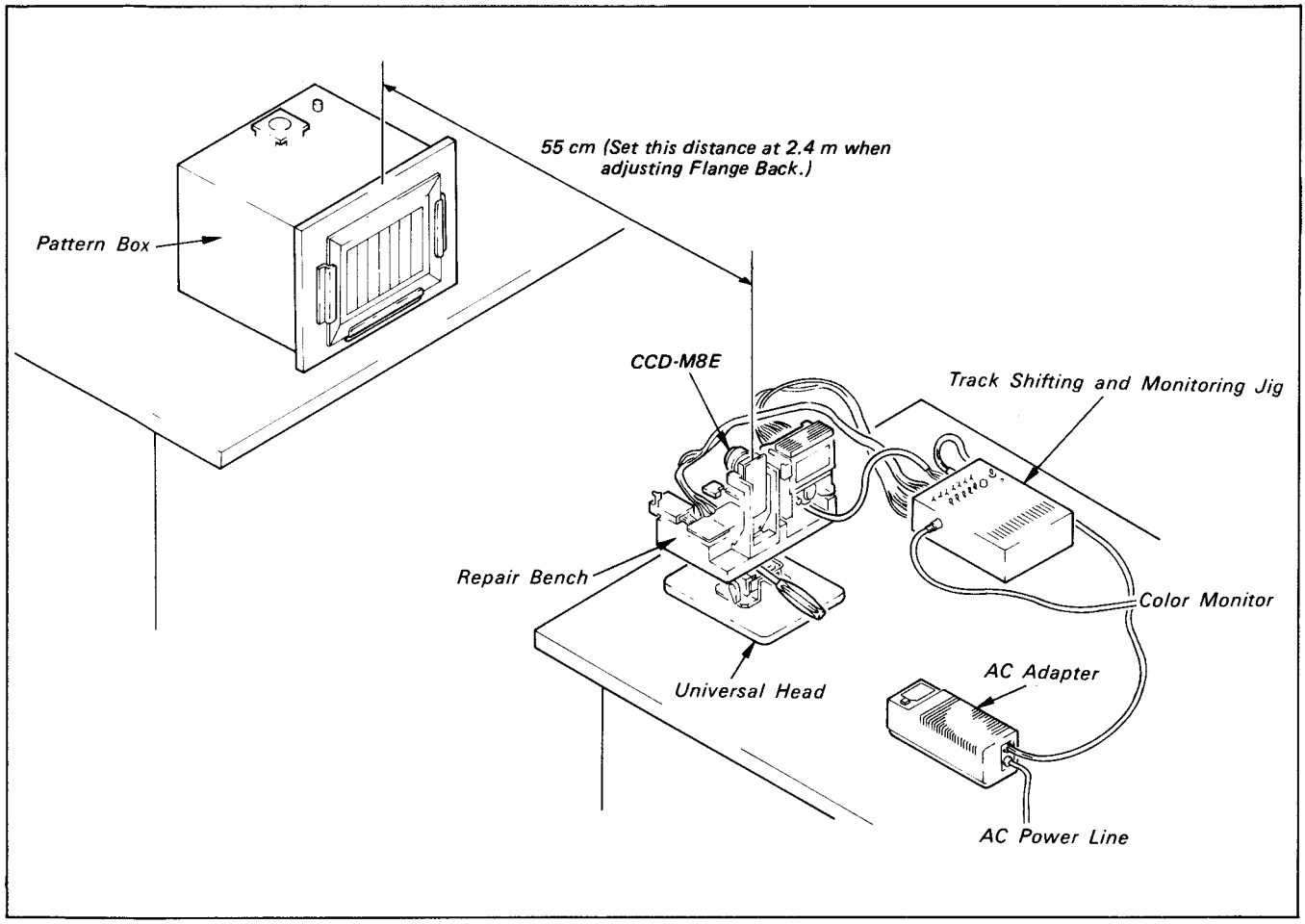

Fig. 1-8

2) When setting CCD-M8E up on a work bench, use a universal head such as shown in Fig. 1-9.

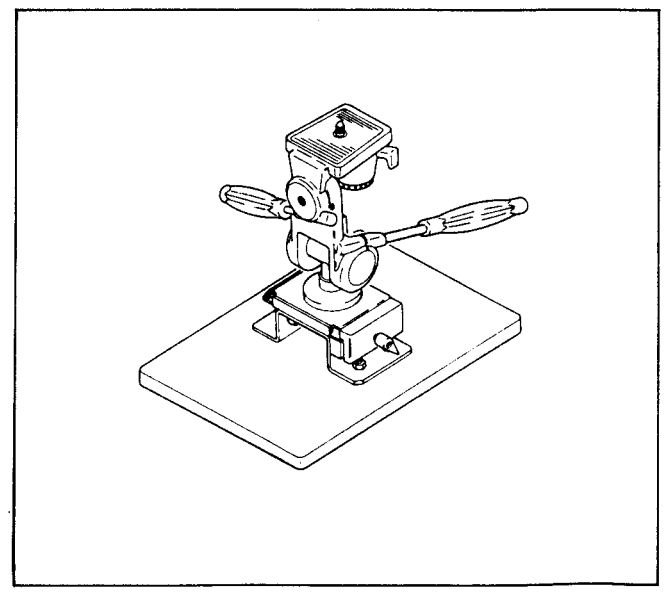

Fig. 1-9

3) Connection Diagram

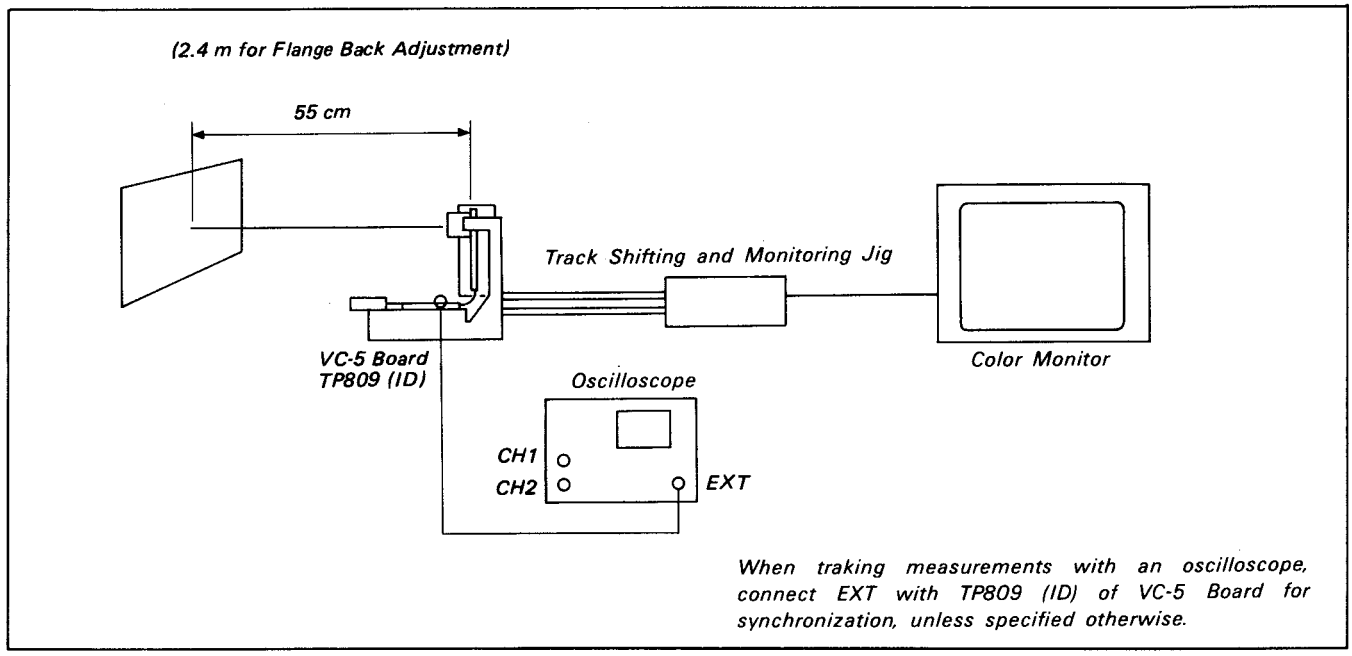

Fig. 1-10

1-5. ITEMS OF CAUTION

1) When making adjustments by the use of a color bar chart, have the pattern frame adjusted in advance as shown in Fig. 1-11 (Standard Pattern Frame).
2) For the cabinet and individual boards dismounting process refer to 2. DISASSEMBLY.

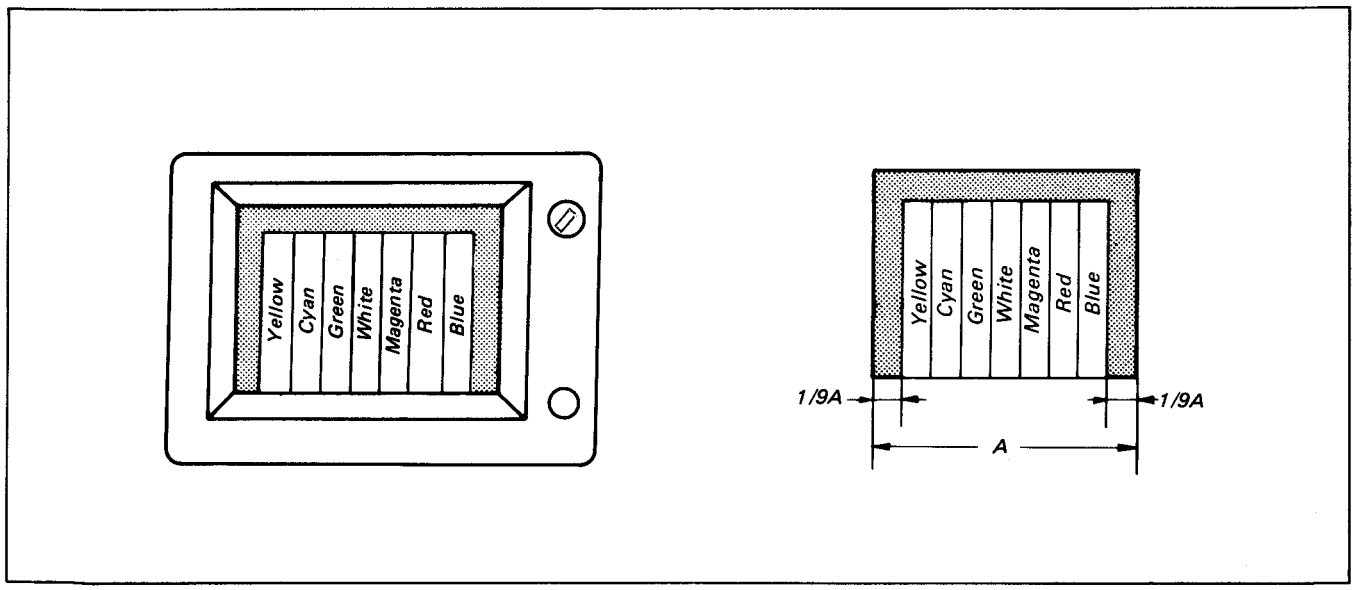

Fig. 1-11

3) When making adjustments, be sure to short (for an ON position of) LENS DOOR SW (S901) with a clip or equivalent first, before engaging REC (record), Stand-by, and PB (Playback) (for the tape path adjustment or similar) modes (see Fig. 1-12).
4) For recording and stand-by modes, momentarily short REC SW on M-10 Board to GND by actuating its contact spring to engage a REC mode, and short it again to engage a stand-by mode.
   Repeating this process will set REC and Stand-by alternately and cyclically (see Fig. 1-12).
5) To take the cassette out, short EJECT SW (S101) in a stand-by mode to have the cassette ejected (see Fig. 1-12).

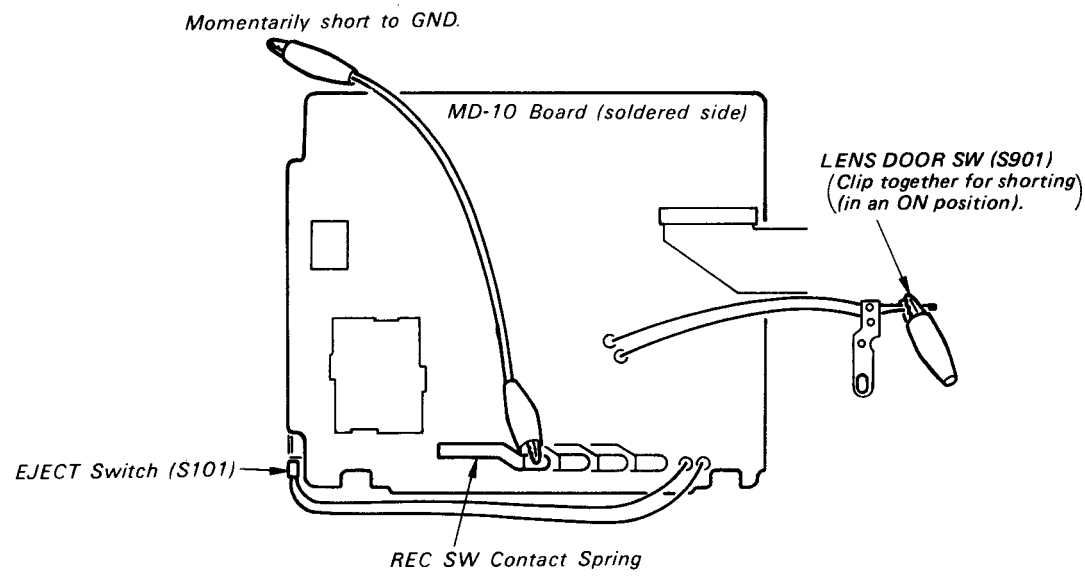

Fig. 1-12

1-6. SERVICING LOCATIONS

VC-4 BOARD (COMPONENT SIDE)

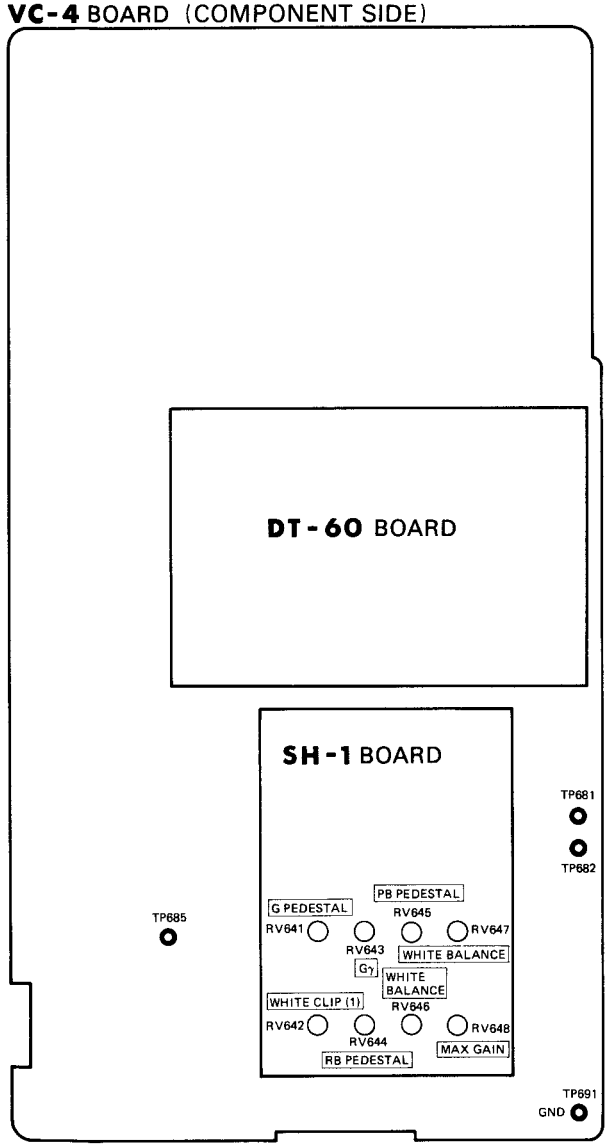

VC-5 BOARD (COMPONENT SIDE)

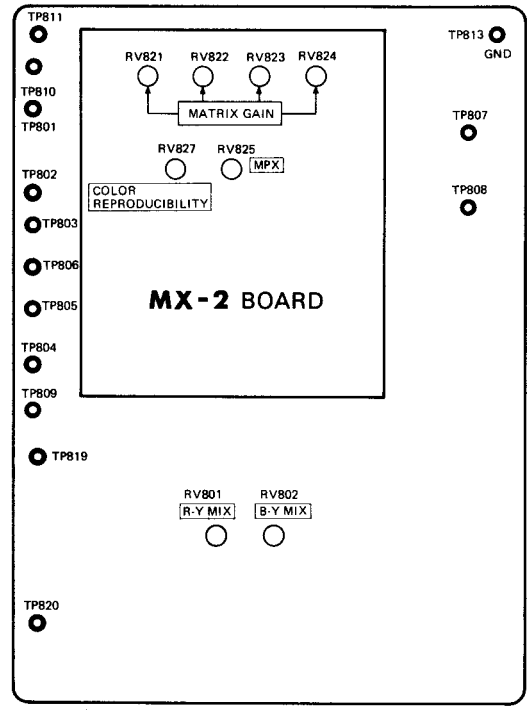

VC-6 BOARD (COMPONENT SIDE)

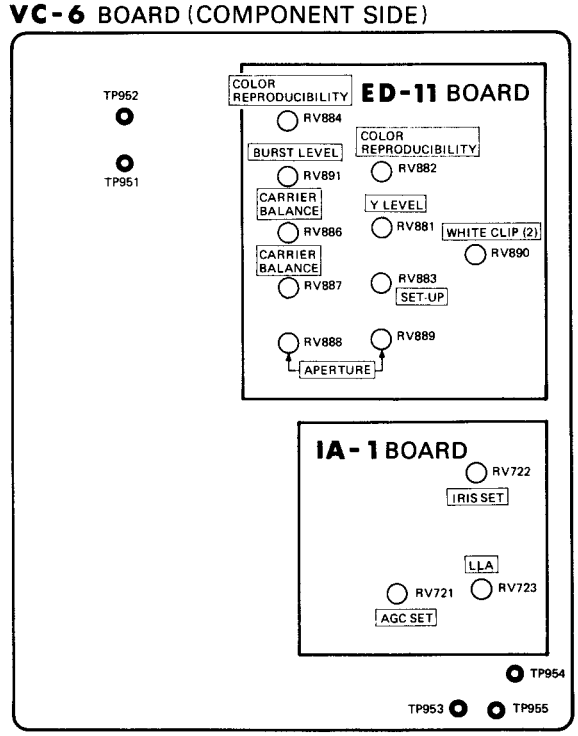

1-7. FLANGE BACK ADJUSTMENT

Equipment required: Siemens Star
Track Shifting and Monitoring Jig
Philips Head Screwdriver

Adjusting Procedure:

1) Position a Siemens star at 2.4m in front of Lens, and adjust its center to coincide with the Monitor Screen center.
2) Engage a state where the under-illuminance LED in the viewfinder (lower right) glows and the Siemens star sppears on Monitor Screen, and while watching the monitored image, turn Lens for a most clearly displayed center wedge (i.e. to have it just focused).
3) Fasten F Ring to Lens with two screws (1) to position the F Ring pin rightward (to the due right) as viewed toward the Lens front (see Fig. 1-13).

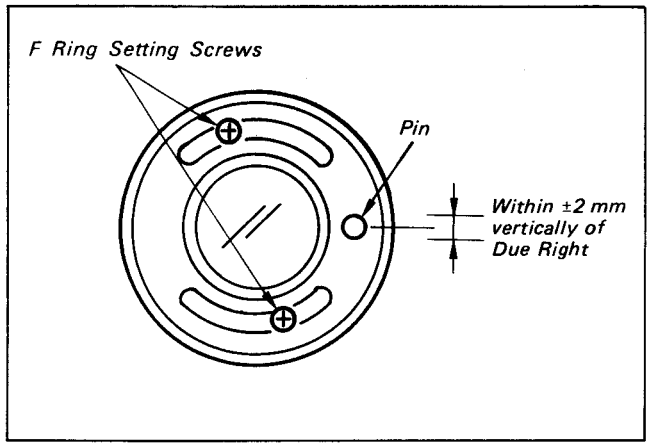

Fig. 1-13

1-8. IRIS SETTING ADJUSTMENT

Equipment required: Oscilloscope
VC-4 Board TP681

Object: Color Bar Chart (in Standard Pattern Frame)

Adjusting Procedure: By turning RV722 on IA-1 Board, adjust the signal level at 185±5 mVp-p (see Fig. 1-14).

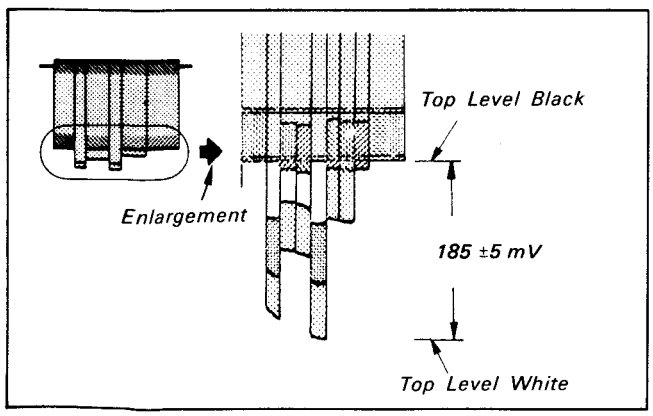

Fig. 1-14

1-9. AGC SETTING ADJUSTMENT

Equipment required: Oscilloscope
VC-5 Board TP810

Object: Totally Black (Lens covered with a black cap)

Adjusting Procedure: By turning RV721 on IA-1 Board, adjust the signal level at 200±5 mVp-p (see Fig. 1-15).

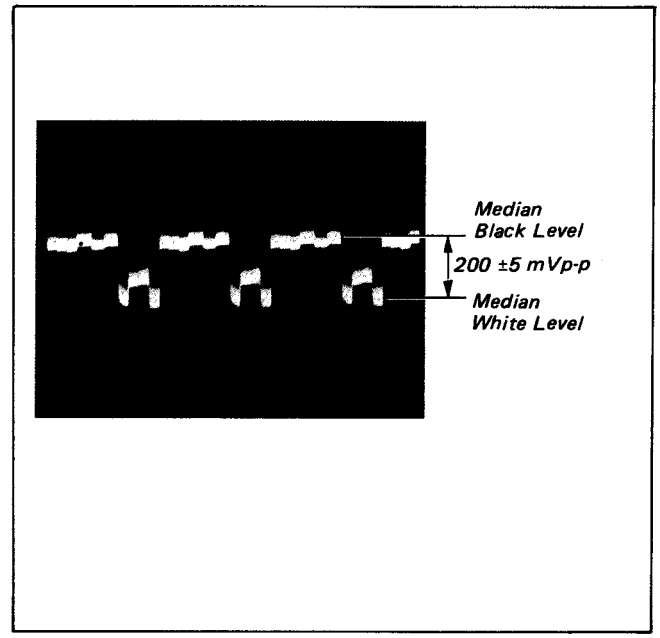

Fig. 1-15

1-10. G PEDESTAL ADJUSTMENT (1)

Equipment required: Oscilloscope
VC-5 Board TP810

Object: Totally Black (Lens covered with a black cap)

Adjusting Procedure: By turning RV641 on SH-1 Board, adjust the pedestal level at 50±5 mVp-p (see Fig. 1-16).

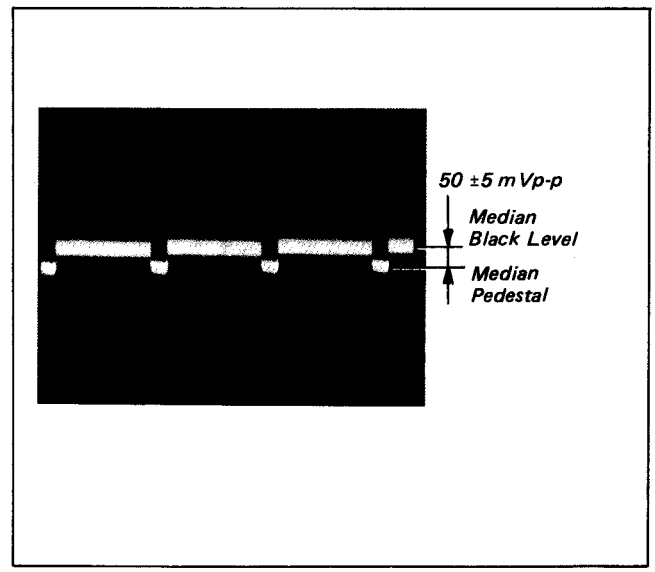

Fig. 1-16

1-11. G GAMMA ADJUSTMENT

Equipment required: Oscilloscope
VC-5 Board TP810
Object: Color Bar Chart (in Standard Pattern Frame)
Adjusting Procedure: By turning RV643 on SH-1 Board, adjust the signal level at 380±5 mVp-p (see Fig. 1-17).

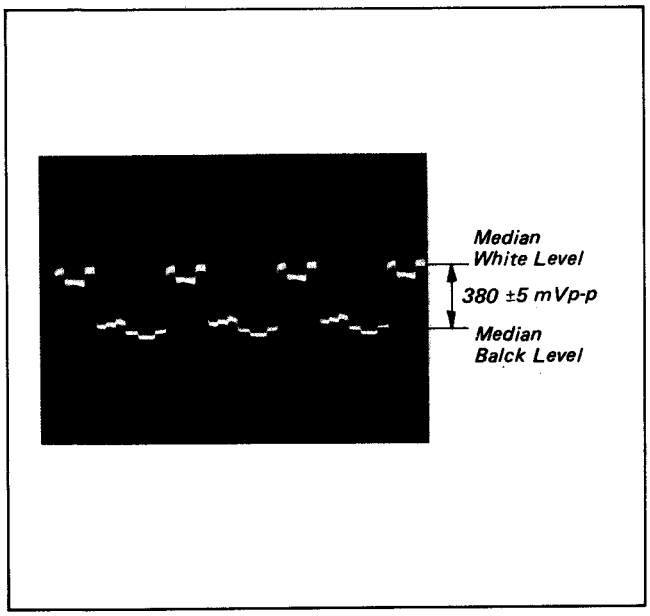

Fig. 1-17

1-12. WHITE CLIP ADJUSTMENT (1)

Equipment required: Oscilloscope
VC-5 Board TP810
Object: Color Bar Chart (in Standard Pattern Frame)
Adjusting Procedure: By turning RV642 on SH-1 Board (that has been preset by G Pedestal Adjustment (1)), adjust the signal level at 360±5 mVp-p (see Fig. 1-18).

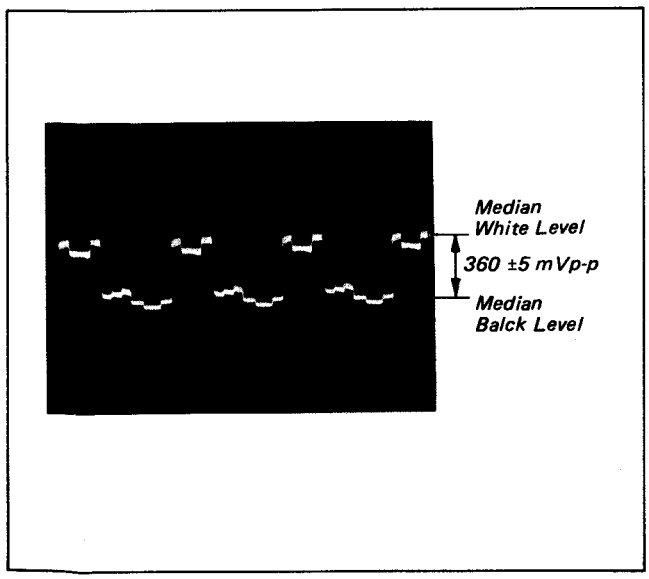

Fig. 1-18

1-13. G PEDESTAL ADJUSTMENT (2)

Equipment required: Oscilloscope
VC-5 Board TP810
Object: Totally Black (Lens covered with a black cap)
Adjusting Procedure: By turning RV641 on SH-1 Board, adjust the pedestal level at 30±5 mVp-p (see Fig. 1-19).

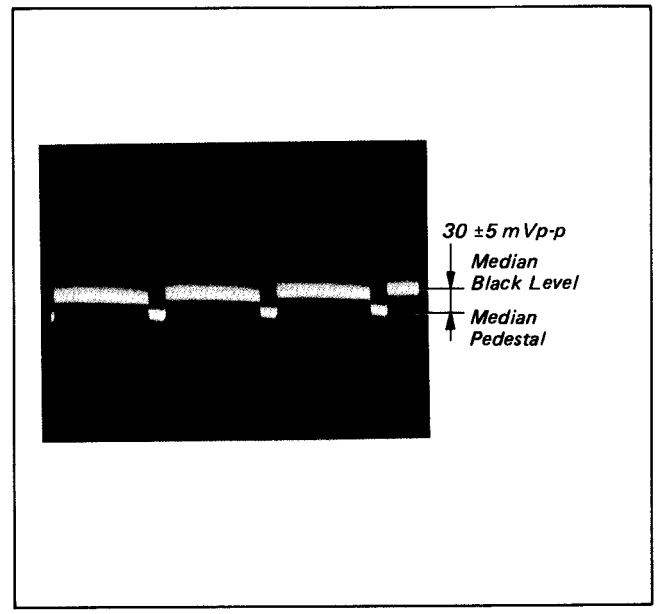

Fig. 1-19

1-14. RB PEDESTAL ADJUSTMENT

Equipment required: Oscilloscope
VC-5 Board CH1 TP810
CH2 TP811
Mode→ADD, Polarity→INV
Object: Totally Black (Lens covered with a black cap)
Adjusting Procedure: By turning RV644 and RV645 on SH-1 Board, adjust for a straightly linearized waveform (see Fig. 1-20).

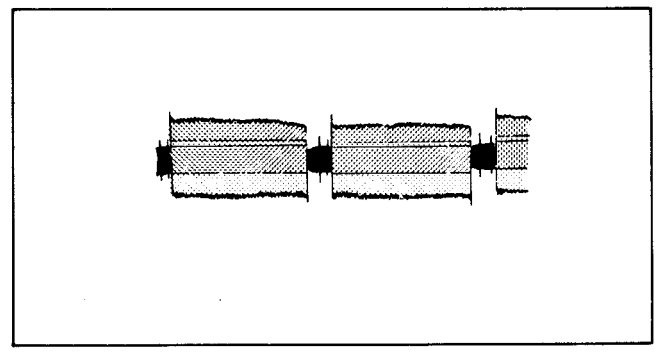

Fig. 1-20

1-15. MPX ADJUSTMENT

Equipment required: Oscilloscope
CH1 (X): VC-5 Board TP808 (B-Y)
CH2 (Y): VC-5 Board TP807
Mode: X-Y

Object: Totally Black (Lens covered with a black cap)

Adjusting Procedure: By turning RV825 (MPX) on MX-2 Board, adjust for a single black spot (see Fig. 1-21).

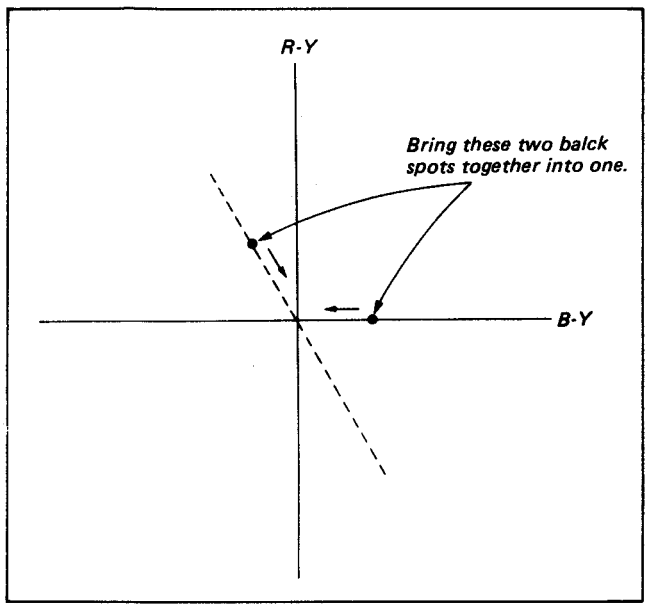

Fig. 1-21

1-16. CARRIER BALANCE ADJUSTMENT

Equipment required: Oscilloscope
VIDEO OUT of Track Shifting and Monitoring Jig

Object: Color Bar Chart (in Standard Pattern Frame)

Adjusting Procedure: By turning RV886 (CB 0°) and RV887 (CB 90°) on ED-11 Board, minimize the black area amplitude (see Fig. 1-22).

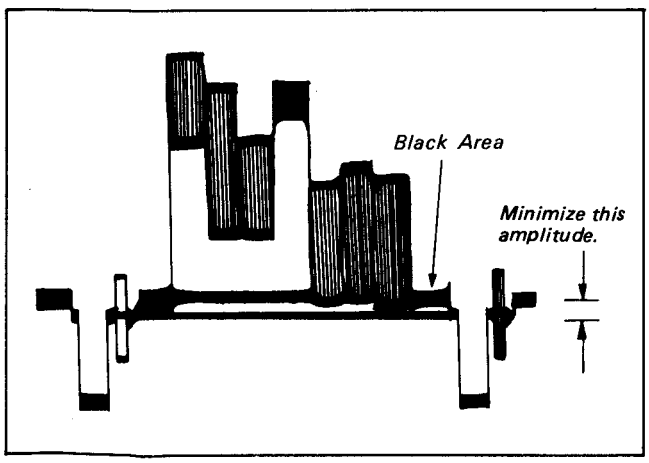

Fig. 1-22

1-17. G_1/G_2 GAIN ADJUSTMENT

Equipment required: Oscilloscope
VC-5 Board

(a) CH1 TP801 (G_0)
CH2 TP802 (G_1)

(b) CH1 TP801 (G_0)
CH3 TP803 (G_2)

Mode→ADD, Polarity→INV

Object: White Pattern (see Fig. 1-23)

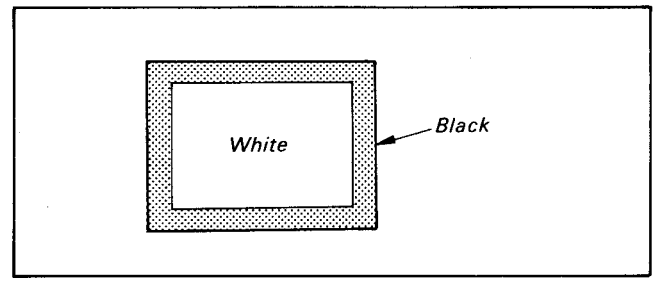

Fig. 1-23

Adjusting Procedure:

1) Set the oscilloscope probe at (a), and by turning RV821 on MX-2 Board, adjust for a straightly linear waveform (see Fig. 1-24).
2) Set the oscilloscope probe at (b), and by turning RV823 on MX-2 Board, adjust for a straightly linear waveform (see Fig. 1-24).

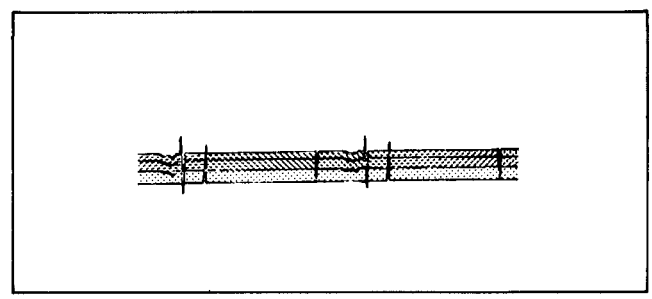

Fig. 1-24

1-18. RB_1/RB_2 GAIN ADJUSTMENT

Equipment required: Oscilloscope
VC-5 Board

(a)	CH1	TP804 (RB_0)	(b)	CH1	TP804 (RB_0)
	CH2	TP805 (RB_1)		CH2	TP806 (RB_2)

Mode→ADD, Polarity→INV

Object: White Pattern (see Fig. 1-23)

Adjust Procedure:

1) Set the oscilloscope probe at (a), and by turning R822 on MX-2 Board, adjust for straightly linear waveform (see Fig. 1-25).
2) Next, set the oscilloscope probe at (b), and by turning RV824 on MX-2 Board, adjust for a straightly linear waveform (see Fig. 1-25).

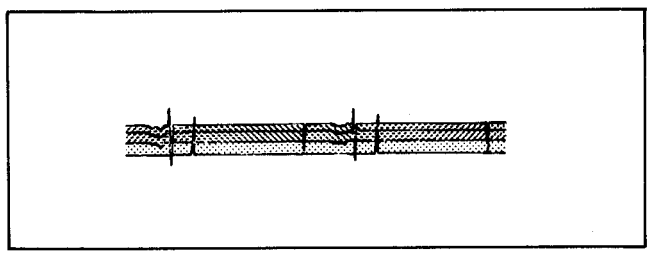

Fig. 1-25

1-19. SET-UP ADJUSTMENT

Equipment required: Oscilloscope
VC-6 Board TP952

Object: Totally Black (Lens covered with a black cap)

Adjusting Procedure: By turning RV883 on ED-11 Board, adjust the signal level at 45±5 mVp-p (see Fig. 1-26).

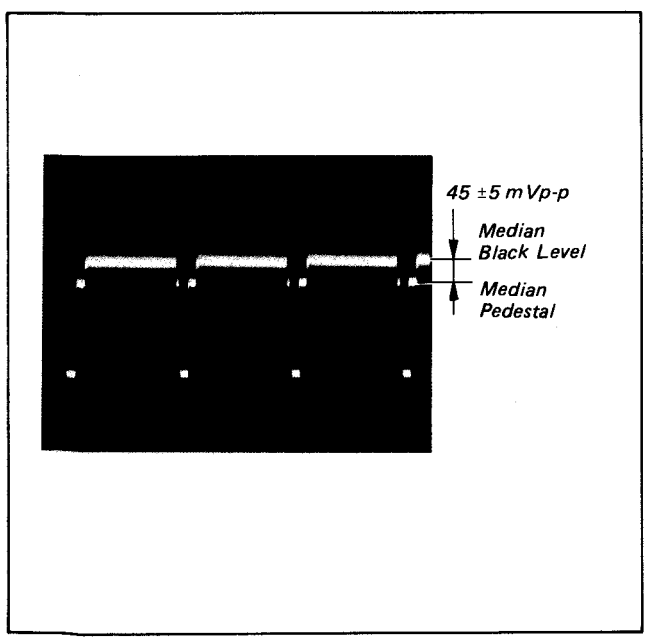

Fig. 1-26

1-20. Y LEVEL ADJUSTMENT

Equipment required: Oscilloscope
VC-6 Board TP952

Object: Color Bar Chart (in Standard Pattern Frame)

Adjusting Procedure: By turning RV881 on ED-11 Board, adjust the signal level at 700^{+10}_{-20} mVp-p (see Fig. 1-27).

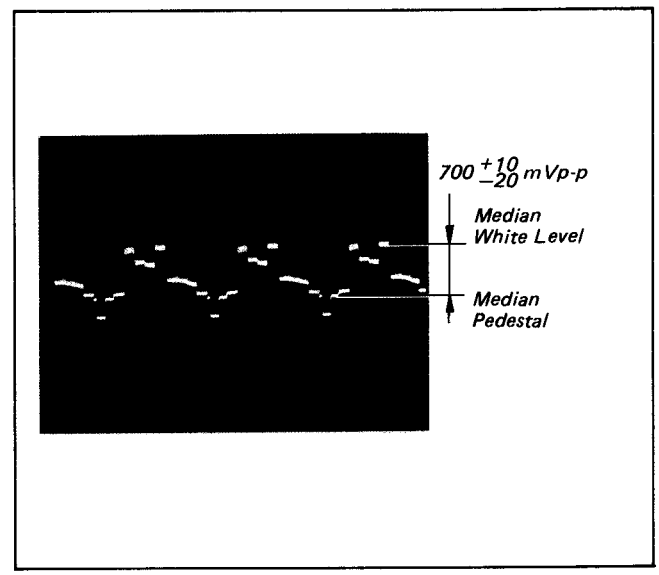

Fig. 1-27

1-21. APERTURE ADJUSTMENT

Equipment required: Oscilloscope
ME-1 Board TP711

Object: Color Bar Chart (in Standard Pattern Frame)

Adjusting Procedure:

1) Preset RV888 on ED-11 Board at its mechanical center, and RV889 at its extreme counterclockwise position (see Fig. 1-28).

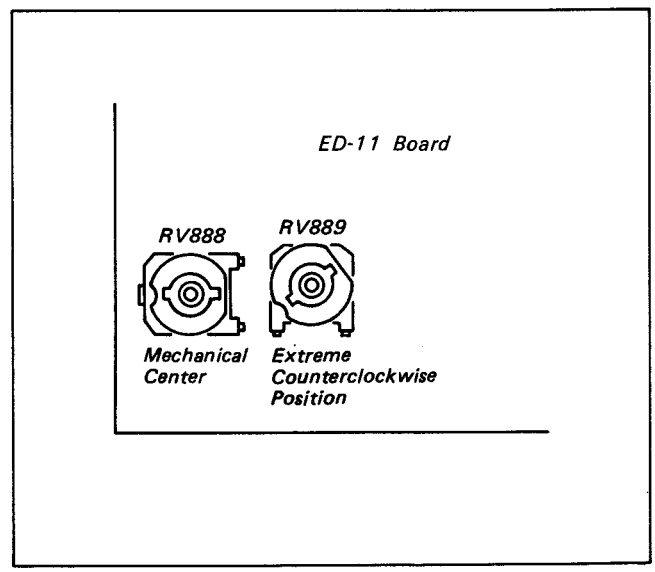

Fig. 1-28

2) After just focusing the image, slightly swing Camera around horizontally, and fix it at a position that has maximized the aperture.
3) By turning RV888 on ED-11 Board, adjust the aperture level between white and magenta at 180±10 mVp-p (see Fig. 1-29).
4) By turning RV889 on ED-11 Board, adjust teh aperture level between white and magenta at 70±10 mVp-p (see Fig. 1-29).

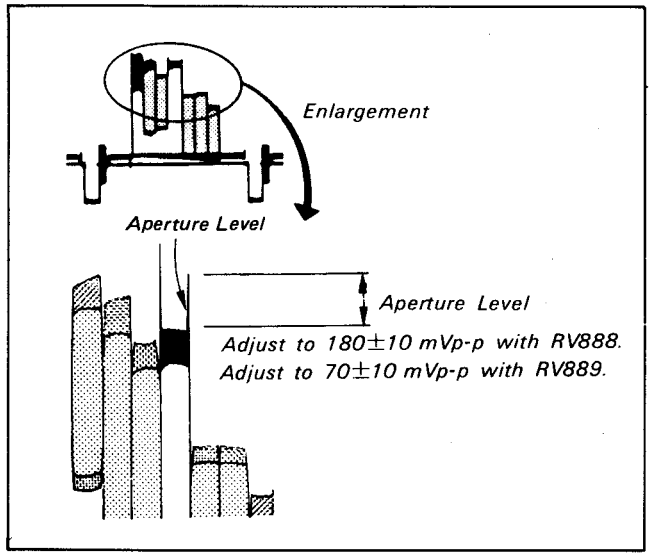

Fig. 1-29

1-22. WHITE CLIP ADJUSTMENT (2)

Equipment required: Oscilloscope
VC-6 Board TP952
Object: High Luminance Pattern
Adjusting Procedure: By turning RV890 on ED-11 Board, adjust the signal level at 850±10 mVp-p (see Fig. 1-30).

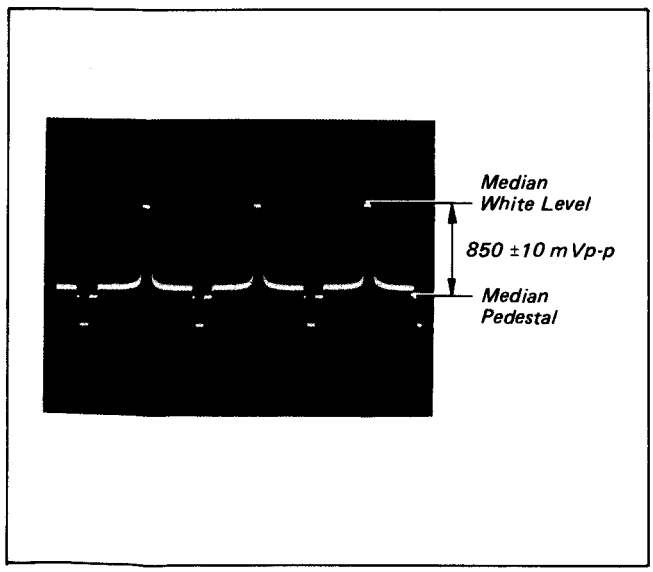

Fig. 1-30

1-23. MAX. GAIN ADJUSTMENT

Equipment required: Oscilloscope
VC-6 Board TP952
Object: Color Bar Chart (in Standard Pattern Frame)
Adjusting Procedure:
1) Apply an ND filter 1.8 to the Lens front.
2) By turning RV648 on SH-1 Board, adjust the waveform level at 330±10 mVp-p (see Fig. 1-31).

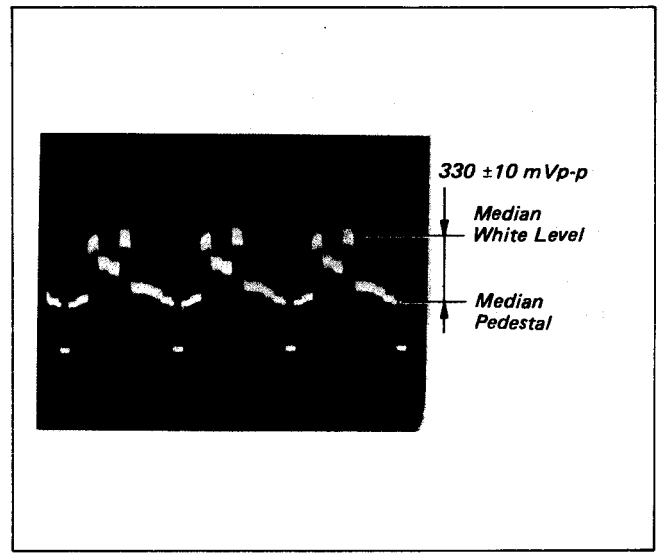

Fig. 1-31

1-24. WHITE BALANCE ADJUSTMENT

Equipment required: Oscilloscope
VC-6 Board TP951
Object:
Adjusting Procedure: By turning RV647 and RV646 on SH-1 Board, minimize the white level (see Fig. 1-32).

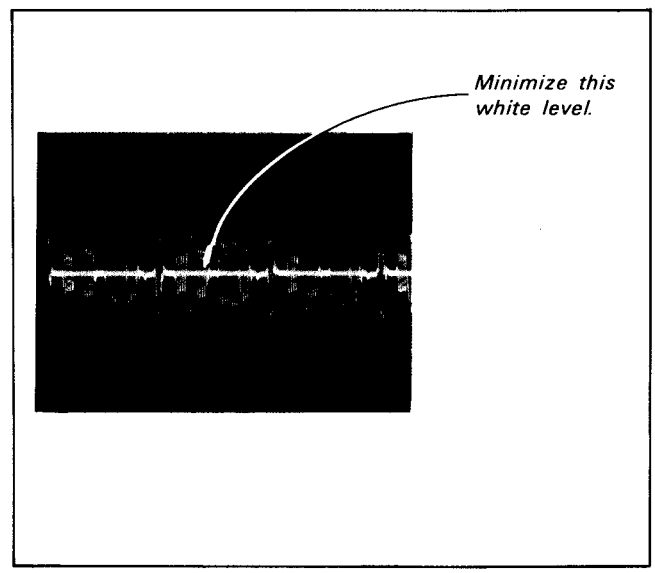

Fig. 1-32

1-25. BURST LEVEL ADJUSTMENT

Equipment required: Oscilloscope
VC-6 Board TP951
Object: Totally Balck (Lens covered with a black cap)
Adjusting Procedure: By turning RV891 on ED-11 Board, adjust the burst level at 520±10 mVp-p (see Fig. 1-33).

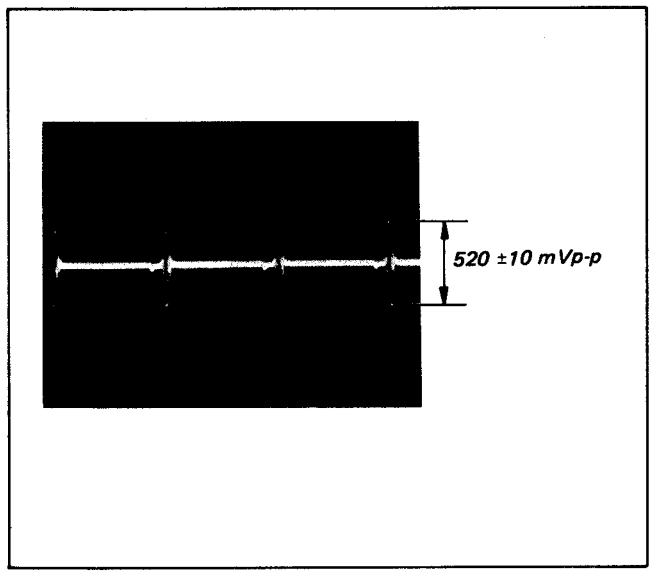

Fig. 1-33

1-26. BURST PHASE ADJUSTMENT

Adjust RV884 of VC-6 board so that the center voltage becomes 2.722 V.

1-27. COLOR REPRODUCIBILITY ADJUSTMENT

Equipment required: Digital Voltmeter
Oscilloscope
Object: Color Bar Chart (in Standard Pattern Frame)
Adjusting Procedure:

1) By turning RV884 on ED-11 Board, adjust the center terminal level at 2.5V DC (see Fig. 1-34).

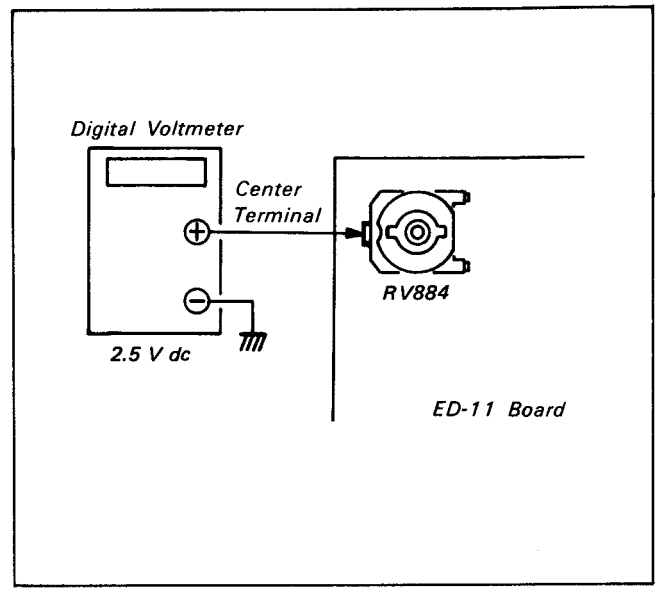

Fig. 1-34

2) Connect the oscilloscope CH-1 and CH-2 to TP808 and TP807, respectively, on VC-5 Board, and engage an X-Y mode of both CH-1 and CH-2 at 50 mV/div.
3) Turn RV801 (R-Y MIX) and RV882 (C GAIN) so that RED enters the center of the color reproduction frame.
4) Turn RV802 (B-Y MIX) RV882 (C GAIN) so that the brightness point of YL enters the center of the color reproduction frame.

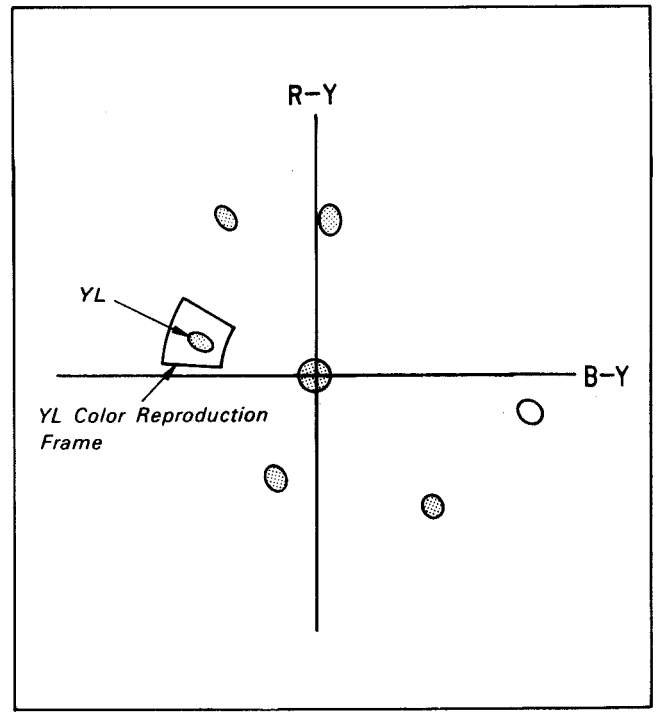

Fig. 1-35

1-28. LLA ADJUSTMENT

Object: Color Bar Chart (in Standard Pattern Frame)

Adjusting Procedure:

1) Cover Lens with an ND filter 1.4.
2) Turn RV723 on IA-1 Board until the LED begins to glow, and leave it there.
3) Replace the ND filter with one at 0.9, and check to assure the LED not to glow this time.

2. MECHANICAL ADJUSTMENT (VIDEO SECTION)

2-1. PREPARATION FOR CHECK, ADJUSTMENT AND REPLACEMENT OF THE MECHANICAL SECTIONS

With regard to removal of the cabinet, grip, board, etc., see "2. Disassembly" on SERVICE MANUAL of the above item.

2-1-1. Cassette Arm Assembly

1. Removal

1) Remove screws ❶, ❷, ❸ and ❹.
2) Remove cassette arm assembly ❺ (See Fig. 2-1)

2. Installation

1) Install cassette arm assembly ❺ to the main body so that the 2 positions of pins ❻ enter the predetermined positions.
2) Install screws ❶ and ❷.
3) Install screw ❸ loosely and tighten in the order of screw ❹ and screw ❸.

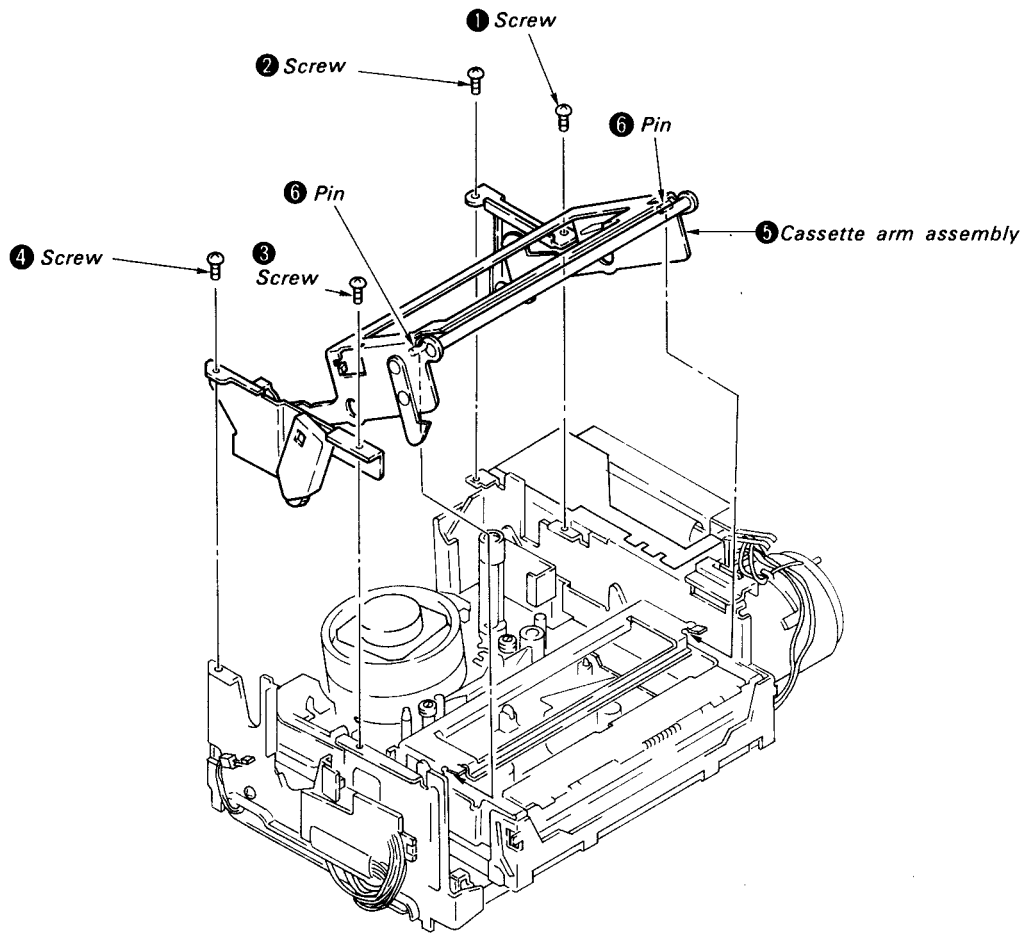

Fig. 2-1

2-1-2. LS cassette Compartment Assembly

1. Removal

1) Remove screws ❶, ❷, ❸ and ❹.
2) Push 2 positions of the slot ❽ of LS chassis ❻ in the direction of arrow Ⓐ, and remove 2 positions of pin ❺.
3) Remove LS cassette compartment assembly ❼. (See Fig. 2-2)

2. Installation

1) Install LS cassette compartment assembly ❼ to the main body.
2) Push the 2 positions of slot ❽ of LS chassis in the direction of arrow Ⓐ, and insert pin ❺ at 2 positions.
3) Install screws ❸ and ❹ loosely and tighten in the order of screws ❶, ❷, ❸ and ❹.

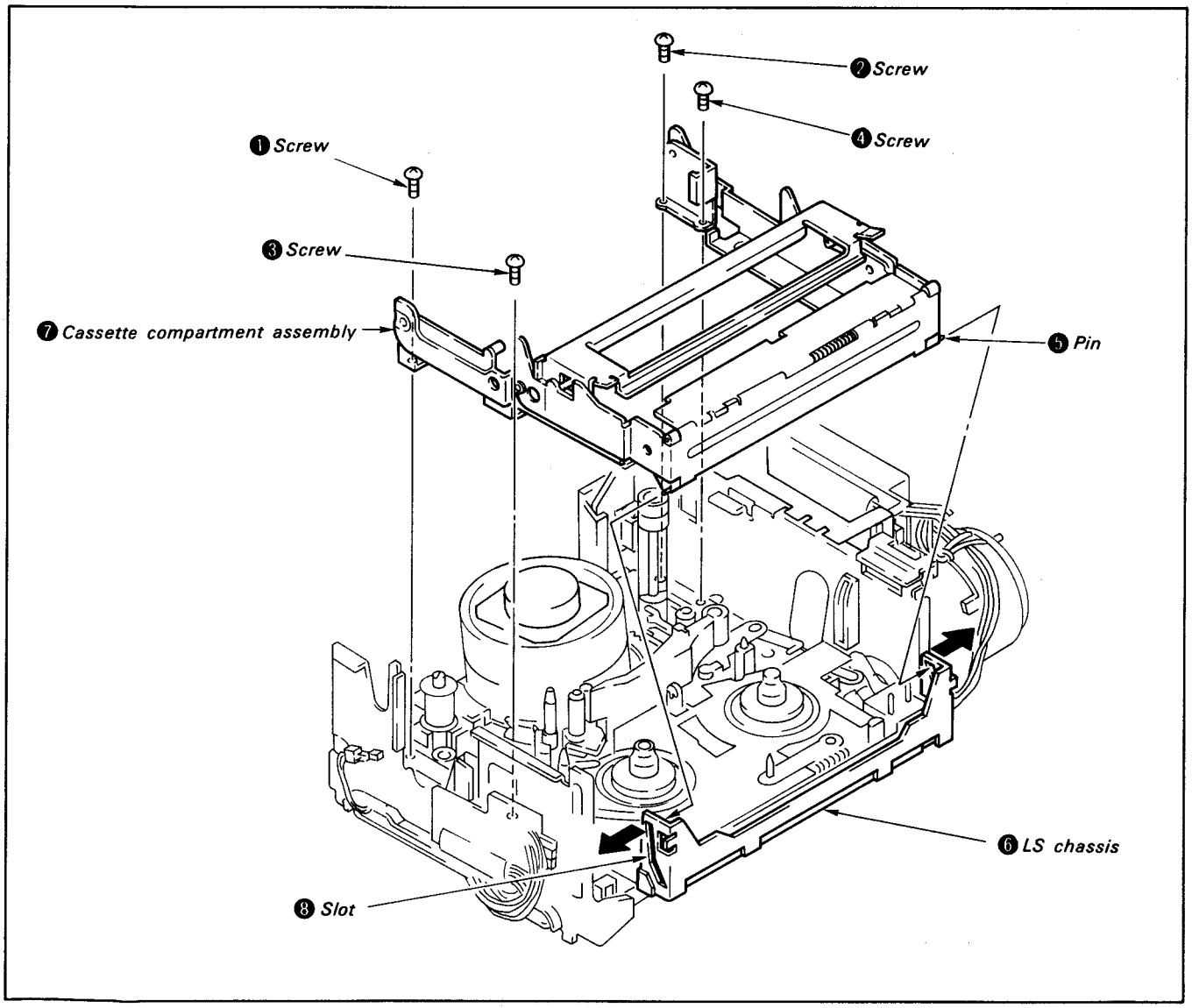

Fig. 2-2

2-1-3. Extracting Method with the Cassette Loading End State

1) By referring 2-3-22, set MD-10 board up to be able to open.
2) By referring 2-1-5, connect the mode selector.
   Note:
   The mode indicated by [ ] is set by pushing the buttons of the mode selector.
3) Set up [GUIDE LOAD] mode, and move each tape guide from the position shown in Fig. 2-4 to the position shown in Fig. 2-5.
4) Open MD-10 board ❶, and wind up tape into cassette by rotating the rotor ❷ in the direction of arrow. (See Fig. 2-3)
   Note:
   Though in [GUIDE LOAD] mode, cannot wind up tape when each guide is not positioned as shown in Fig. 2-5, close to the cassette.
5) Be sure to wind up tape completely, and set up [EJECT] mode, then take out the cassette.

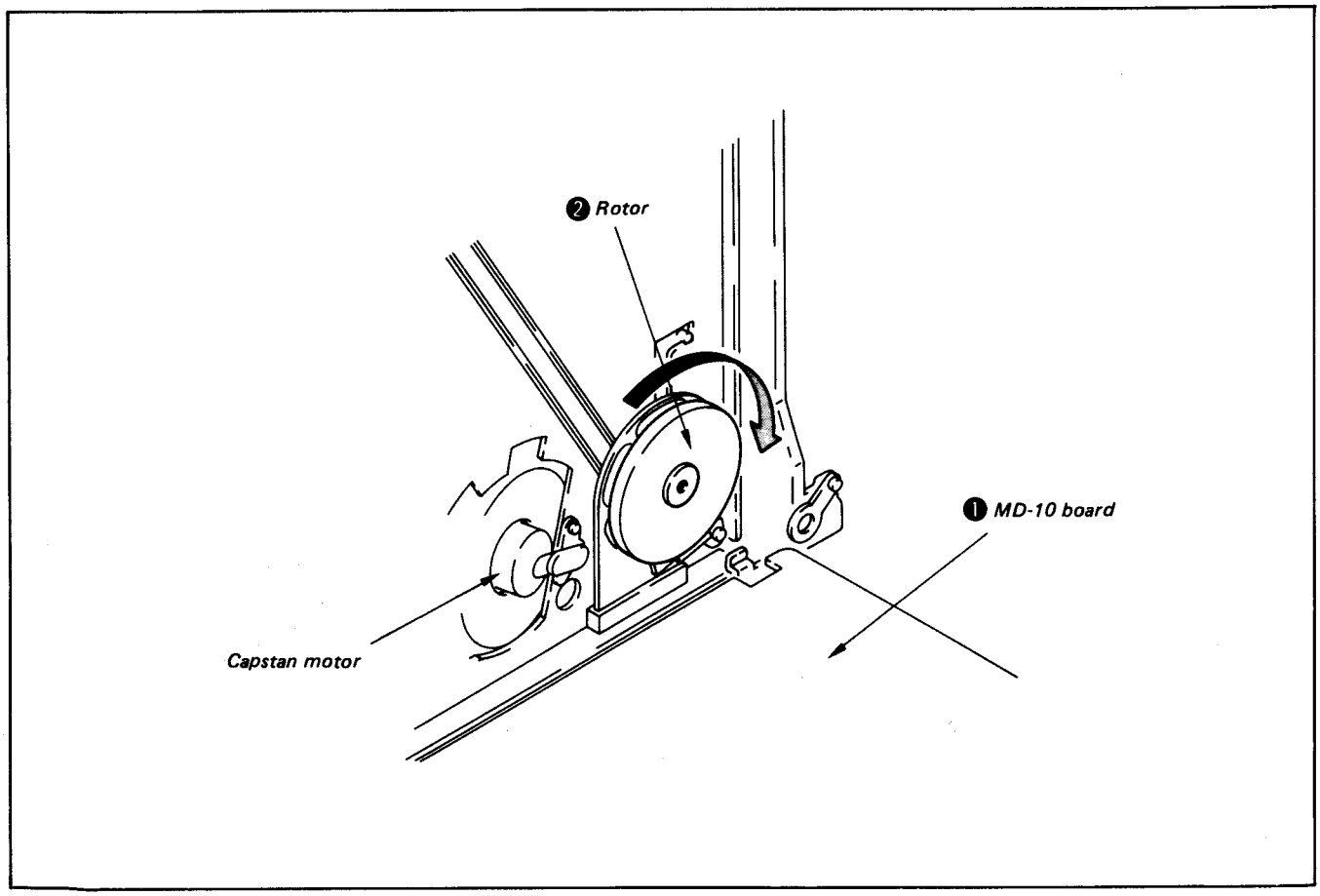

Fig. 2-3

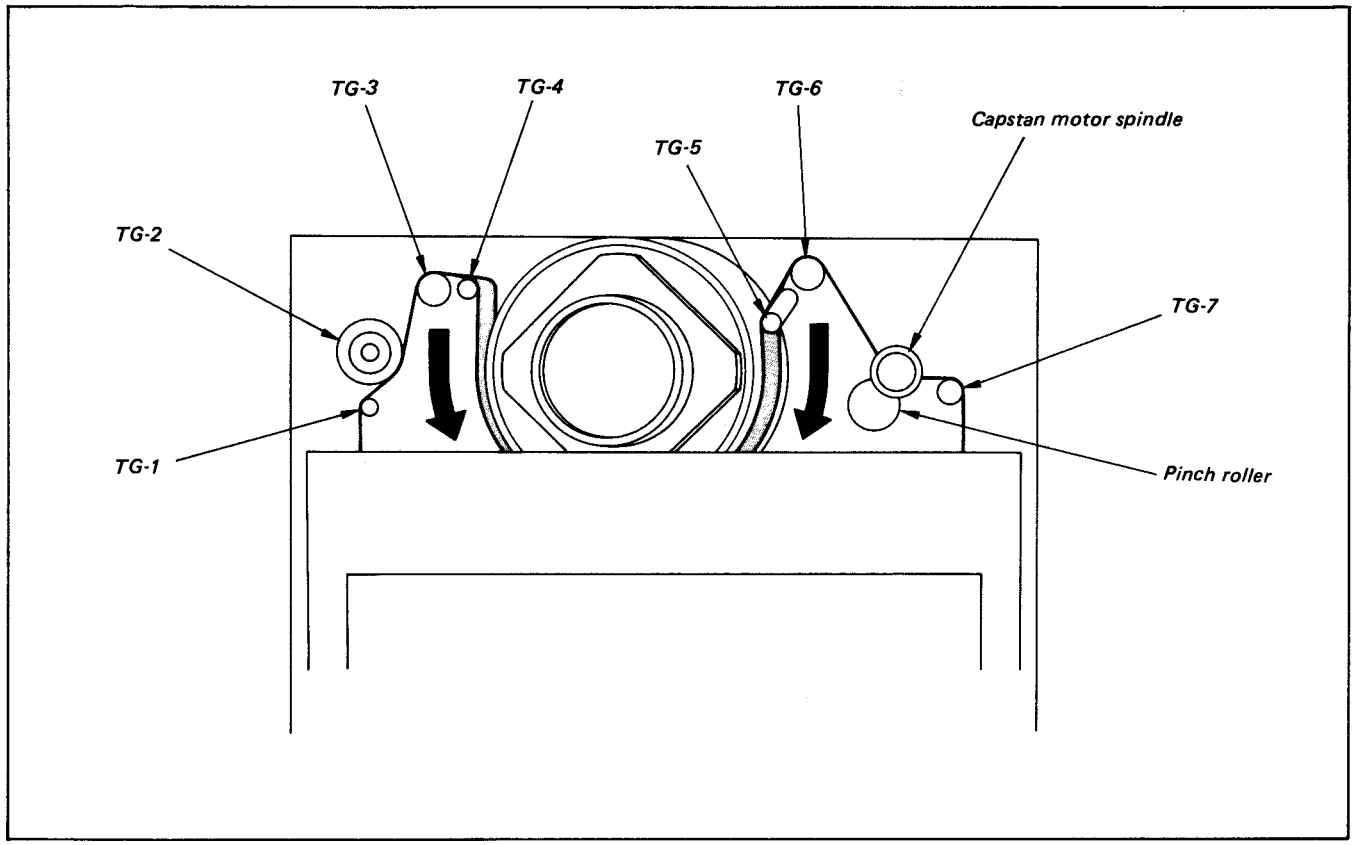

Fig. 2-4

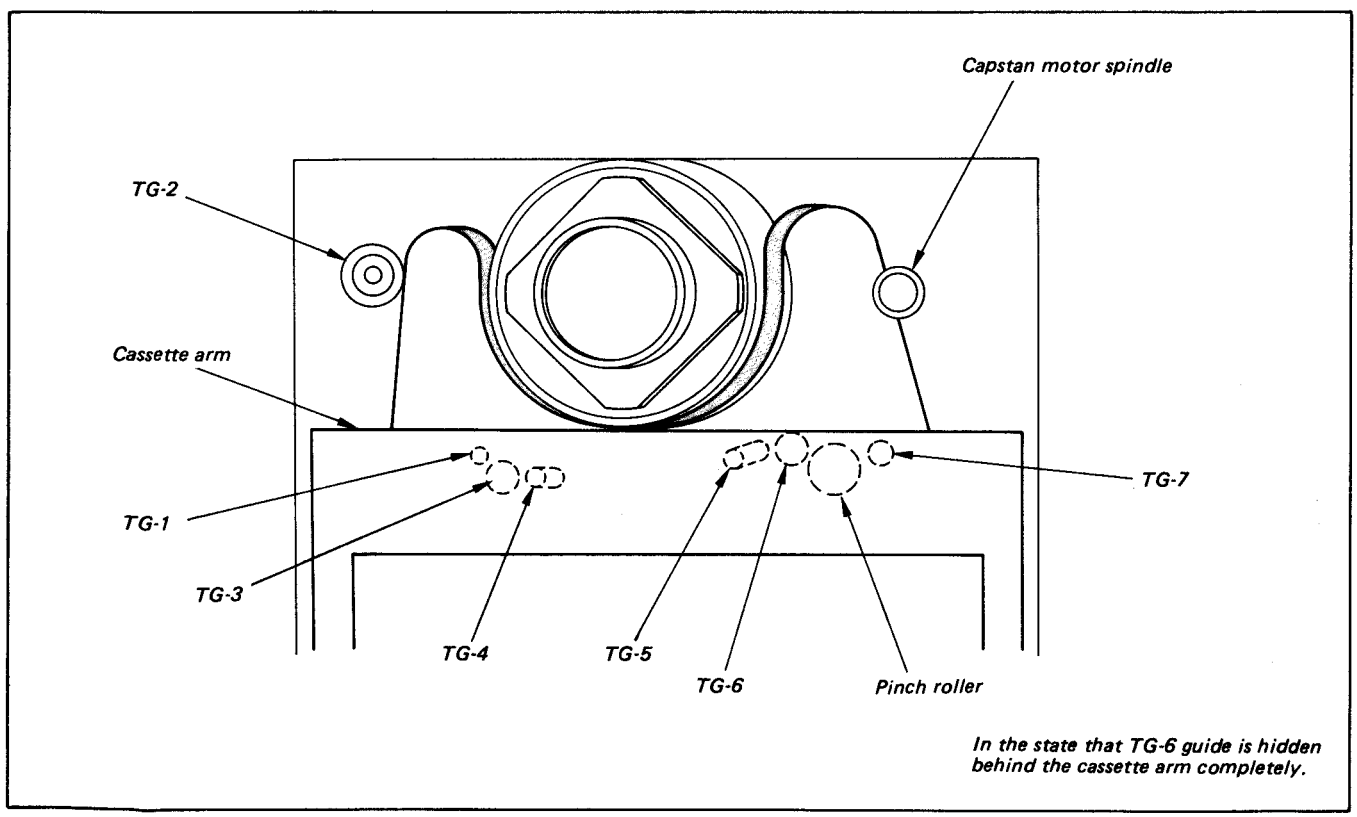

In the state that TG-6 guide is hidden behind the cassette arm completely.

Fig. 2-5

2-1-4. Cassette and Cassette Arm Assembly and Method to Operate the LS Cassette Compartment Assembly in the Removed State

1. How to load

1) Apply +6V to terminal plates ❶ and ❷ and 0V to terminal plate ❸.
2) Stick an opaque tape ❻ onto the tape end sensor of the ES-11 board ❺ and blindfold.
3) Secure with adhesive tape ❽ with the pin of push SW ❼ being in the pushed state.
4) Press in the return prevention arm ❾ in the direction of arrow Ⓐ. (Set becomes into loading state.) (See Fig. 2-6)

2. Recording state

1) Carry out ❶ above, turn ON the door switch ❿, and ground terminal plate ❹.

3. How to eject

1) Turn ON EJECT SW ⓫.

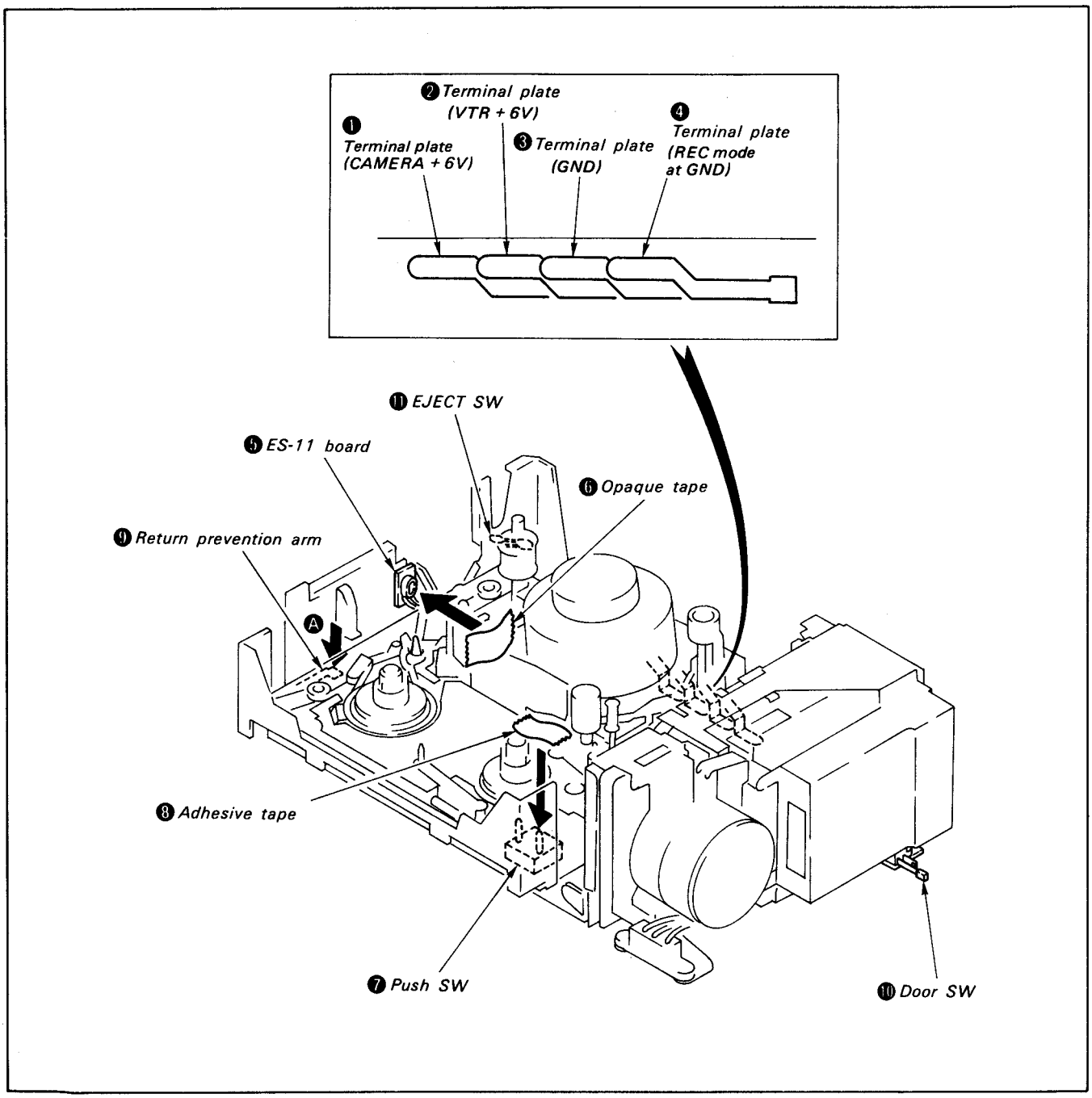

Fig. 2-6

2-1-5. Handling of Mode Selector

- Install mode selector II panel (See Fig. 2-7)

1. Name of each section (See Fig. 2-8)

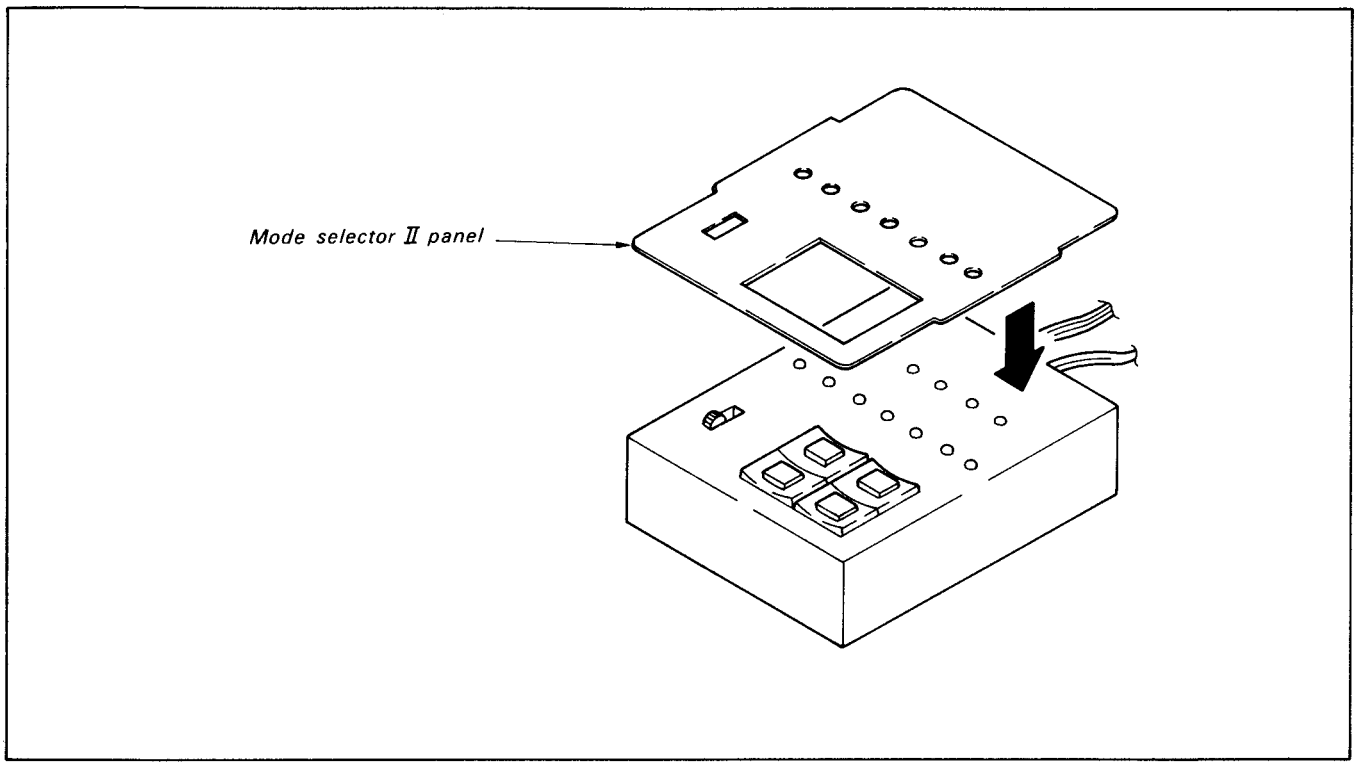

Fig. 2-7

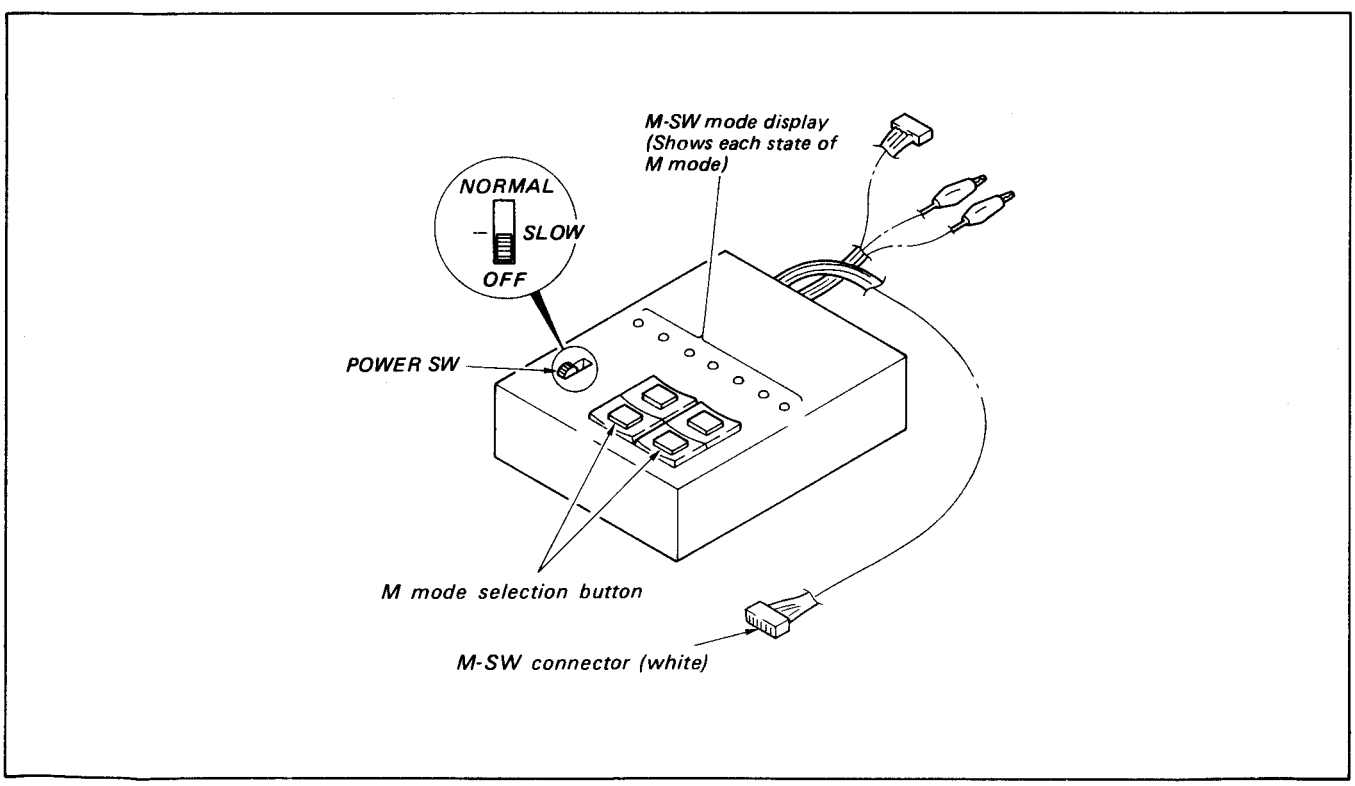

Fig. 2-8

2. Connection

1) Remove connector of FP-10 flexible board with a flatblade screwdriver, etc.
2) Insert mode selector II conversion connector.
3) Insert M-SW connector into mode selector II conversion connector. (See Fig. 2-9)

3. Handling

1) Use only M mode selection button.
2) When selecting, if not in individual modes, "BLANK" is lit.
3) When right side of M mode selection button is pressed continuously, the lamps are lit in the order of EJECT→USE→GUIDE LOAD→REC→READY.
4) When rendering into READY→EJECT, press the selection button on the left side to obtain the objective mode.

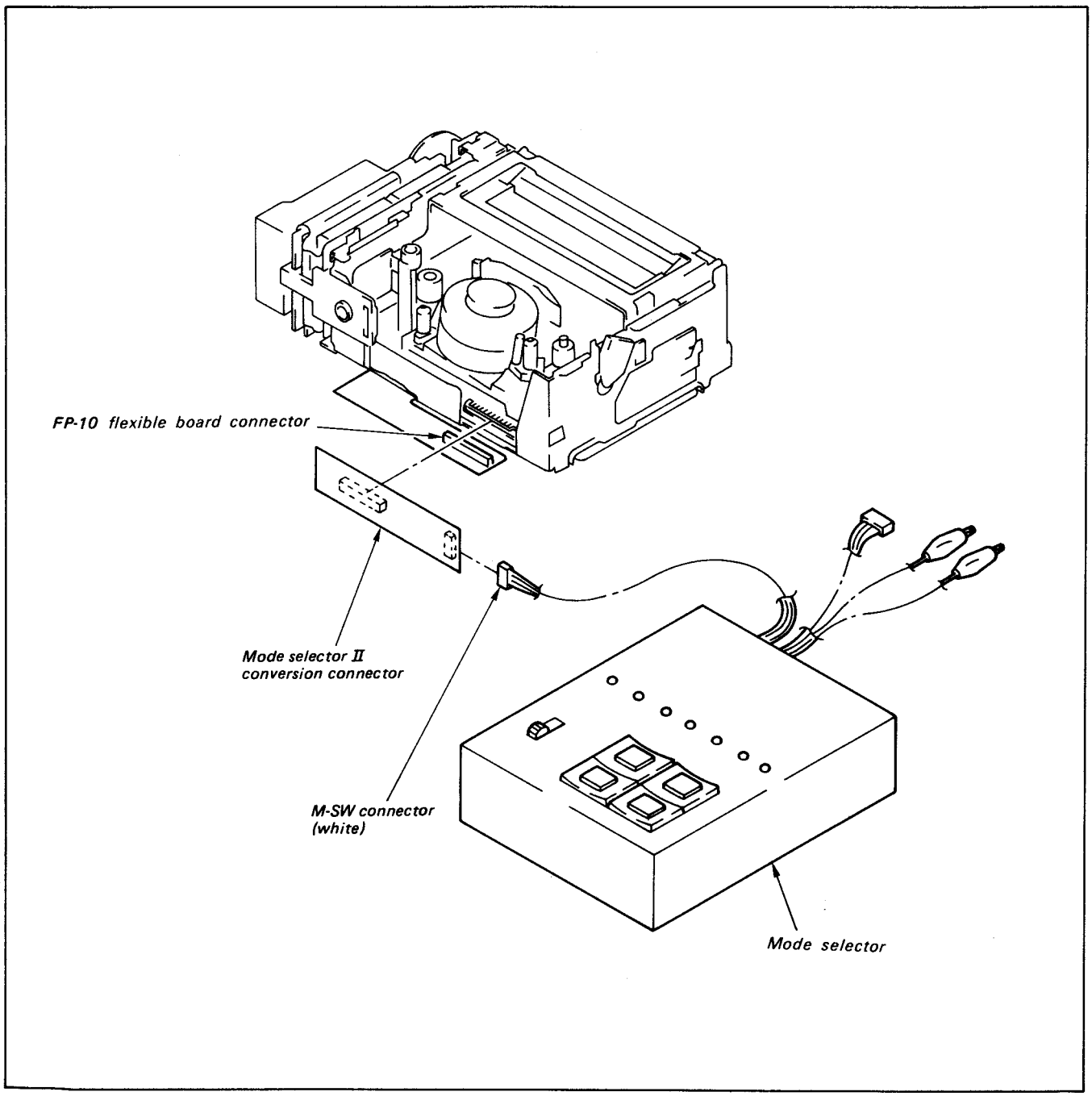

Fig. 2-9

4. Mode selector schematic diagram

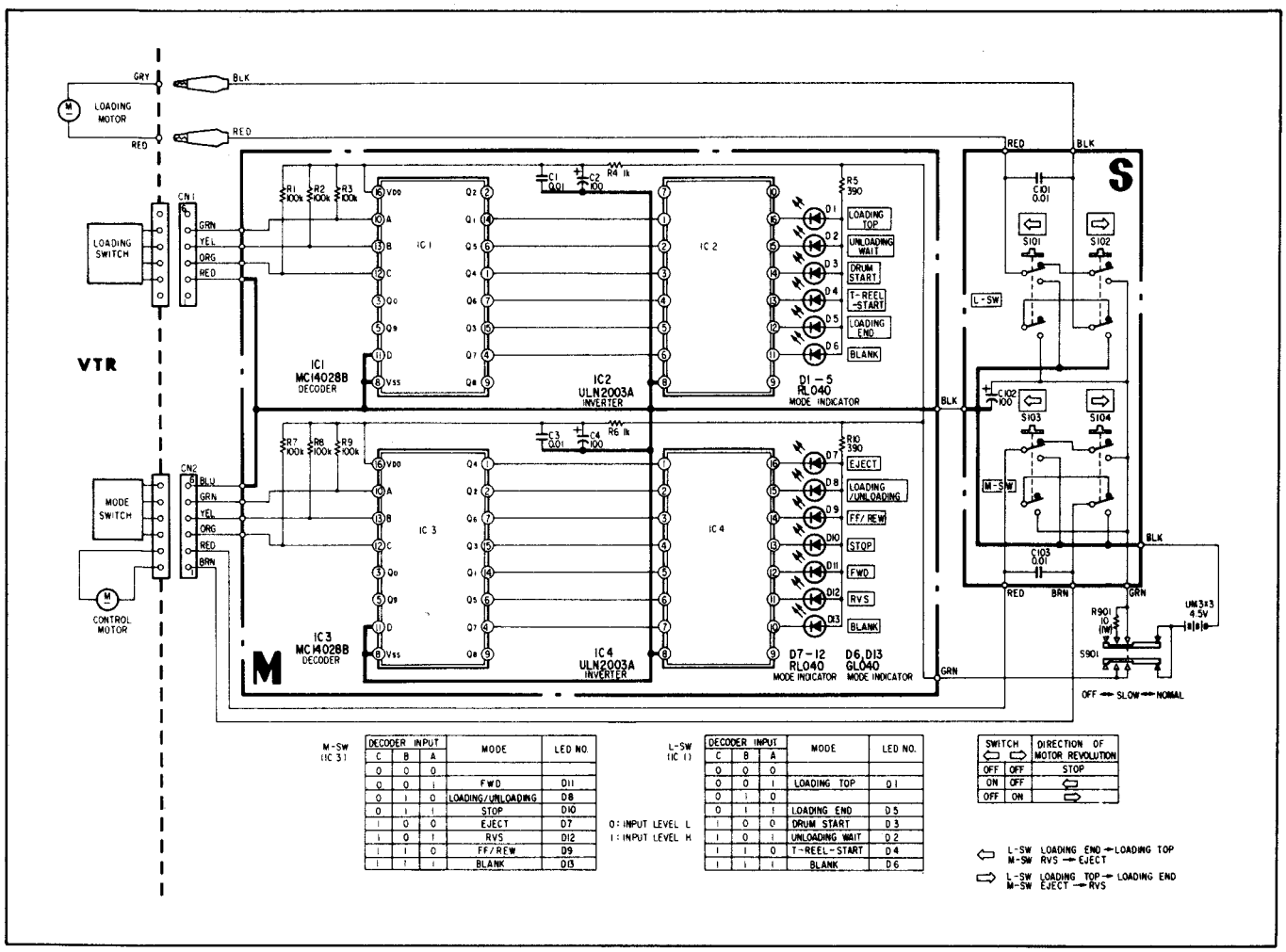

M-SW (IC 3)

DECODER INPUT C	B	A	MODE	LED NO.
0	0	0		
0	0	1	FWD	D11
0	1	0	LOADING/UNLOADING	D8
0	1	1	STOP	D10
1	0	0	EJECT	D7
1	0	1	RVS	D12
1	1	0	FF/REW	D9
1	1	1	BLANK	D13

L-SW (IC 1)

DECODER INPUT C	B	A	MODE	LED NO.
0	0	0		
0	0	1	LOADING TOP	D1
0	1	0		
0	1	1	LOADING END	D5
1	0	0	DRUM START	D3
1	0	1	UNLOADING WAIT	D2
1	1	0	T-REEL-START	D4
1	1	1	BLANK	D6

0 : INPUT LEVEL L
1 : INPUT LEVEL H

SWITCH ⇦	⇨	DIRECTION OF MOTOR REVOLUTION
OFF	OFF	STOP
ON	OFF	⇦
OFF	ON	⇨

⇦ L-SW LOADING END → LOADING TOP
M-SW RVS → EJECT

⇨ L-SW LOADING TOP → LOADING END
M-SW EJECT → RVS

5. Mode selector parts list

Ref. No.	Part No.	Description		
		CAPACITOR		
C1	1-108-579-00	MILER	0.01μF	50V
C2	1-123-333-00	ELECT	100μF	24V
C3	1-108-579-00	MILER	0.01μF	50V
C4	1-123-333-00	ELECT	100μF	24V
C101	1-108-579-00	MILER	0.01μF	50V
C103	1-108-579-00	MILER	0.01μF	50V
		DIODE		
D1	8-179-812-31	DIODE	RL040	
D2	8-179-812-31	DIODE	RL040	
D3	8-179-812-31	DIODE	RL040	
D4	8-179-812-31	DIODE	RL040	
D5	8-179-812-31	DIODE	RL040	
D6	8-719-812-33	DIODE	GL040	
D7	8-179-812-31	DIODE	RL040	
D8	8-179-812-31	DIODE	RL040	
D9	8-179-812-31	DIODE	RL040	
D10	8-179-812-31	DIODE	RL040	
D11	8-179-812-31	DIODE	RL040	
D12	8-179-812-31	DIODE	RL040	
D13	8-719-812-33	DIODE	GL040	

Ref. No.	Part No.	Description		
		IC		
IC1	8-759-240-28	IC	TC4028BP	
IC2	8-759-120-03	IC	μPA2003A	
IC3	8-759-240-28	IC	TC4028BP	
IC4	8-759-120-03	IC	μPA2003A	
		RESISTOR		
R1	1-247-179-00	CARBON	100K	1/4W
R2	1-247-179-00	CARBON	100K	1/4W
R3	1-247 179-00	CARBON	100K	1/4W
R4	1-247-131-00	CARBON	1K	1/4W
R5	1-247-121-00	CARBON	390	1/4W
R6	1-247-131-00	CARBON	1K	1/4W
R7	1-247-179-00	CARBON	100K	1/4W
R8	1-247-179-00	CARBON	100K	1/4W
R9	1-247-179-00	CARBON	100K	1/4W
R10	1-247-121-00	CARBON	390	1/4W
R901	1-214-594-00	METAL FILM	10	1W

2-2. PERIODIC CHECK AND MAINTENANCE

- In order to fully exhibit the functions and performance of the set, carry out the following maintenance and periodic checks for the equipment and tape. In addition, after repair, carry out the following itemized maintenance irrespective of the user's length of time of usage.

2-2-1. Cleaning of Rotary Drum Assembly

1) Press a chamois cloth (Ref.No.J-2) soaked in cleaning fluid (Ref.No.J-1) lightly against the rotary drum assembly, and slowly rotate the rotary upper drum assembly counter-clockwise by hand to clean.

Note:
Do not use the power supply to rotate the motor, and do not rotate the drum clockwise by hand. Also, there is the danger of damaging the head tip if the chamois cloth is moved vertically relative to the head tip, so follow the instruction above for cleaning.

2-2-2. Cleaning of Tape Path

Place the cassette compartment assembly in the EJECT state, and clean the tape path (TG-1, 2, 3, 4, 5, 6 and 7, pinch roller, and capstan shaft) with a chamois cloth soaked in cleaning fluid. (See Fig.2-10)

2-2-3. Cleaning of Drive System

1) Clean the drive system (relay belt and surface of reel tables) with a chamois cloth soaked in cleaning fluid.

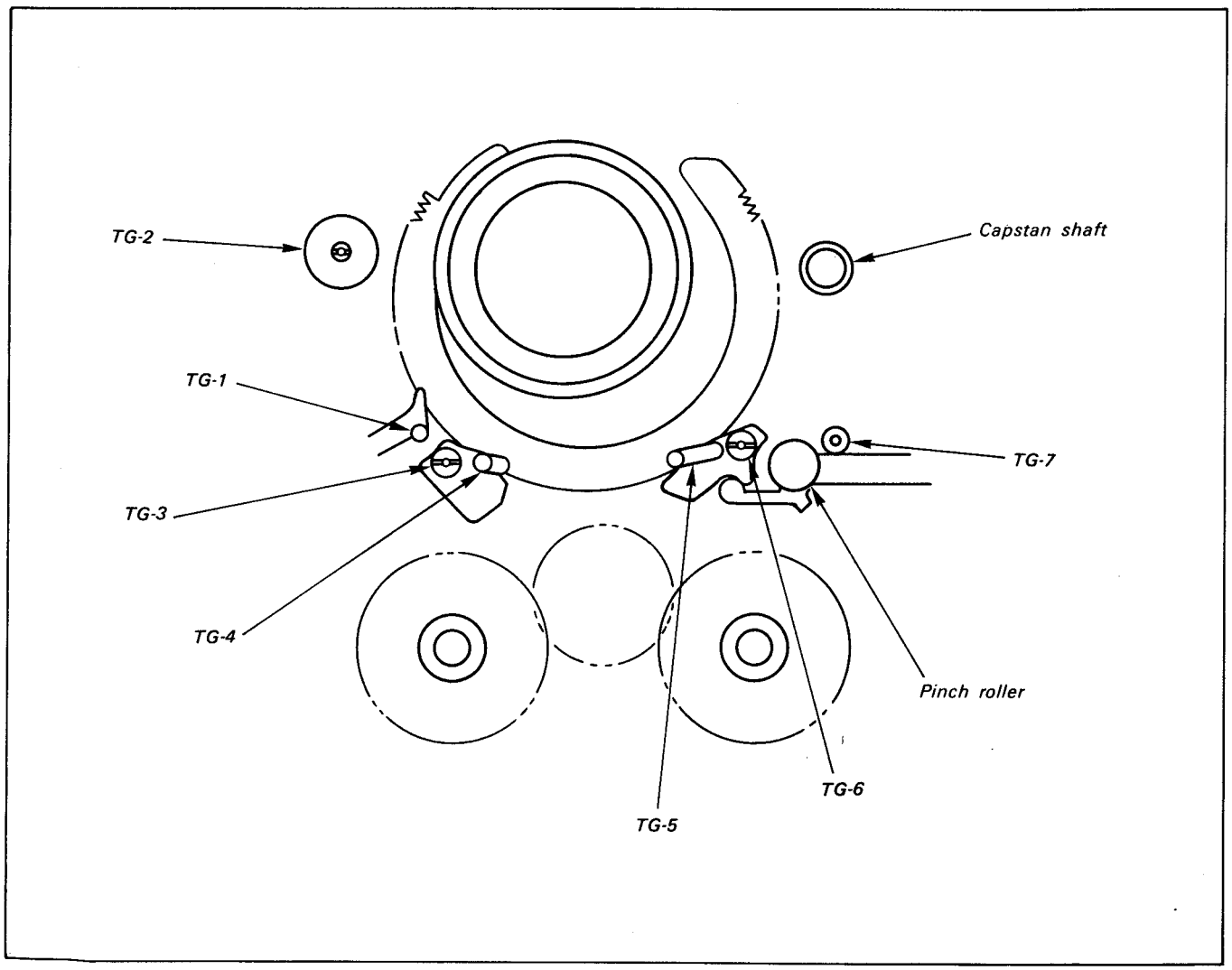

Fig. 2-10

2-2-4. Periodic Check

Location of Maintenance and check	Hours of Use (H)										Remarks
	500	1000	1500	2000	2500	3000	3500	4000	4500	5000	
Cleaning of tape path surface	○	○	○	○	○	○	○	○	○	○	Be careful of oil
Cleaning and degaussing of rotary assembly	○	○	○	○	○	○	○	○	○	○	Be careful of oil
Relay belt	○	○	○	○	○	○	○	○	○	○	3-695-637-01
Capstan shaft	—	◎	—	◎	—	◎	—	◎	—	◎	Be absolutely careful not to get oil on the tape path surface.
Control motor (LM motor)	—	☆	—	☆	—	☆	—	☆	—	☆	8-835-147-01
Abnormal noise	☆	☆	☆	☆	☆	☆	☆	☆	☆	☆	
Back tension measurement	—	☆	—	☆	—	☆	—	☆	—	☆	
Brake system	—	☆	—	☆	—	☆	—	☆	—	☆	
FWD, RVS torque measuement	—	☆	—	☆	—	☆	—	☆	—	☆	

○: Cleaning ◎: Oil ☆: Confirmation

Tape Trans-Portion System
Driving System
Performance Confirmation

Notes:

1) **When performing overhaul, refer to the items above when replacing parts.**
2) **SONY oil**
   - **Be sure to use SONY oil. (There is the danger of various troubles occuring if a different viscosity is used.)**
     SONY oil: Parts No. 7-667-088-61 (MITSUBISHI Diamond Oil 400)
   - **Be absolutely sure to use clean oil without any mixture of dust, etc. when lubricating the shaft bearing. (There is the danger of wear and burning if dirty oil is used with a mixture of dust, etc.)**
   - **One drop of oil means the amount which sticks to a 2 mm diameter rod, as shown in figure. (See Fig. 2-11)**

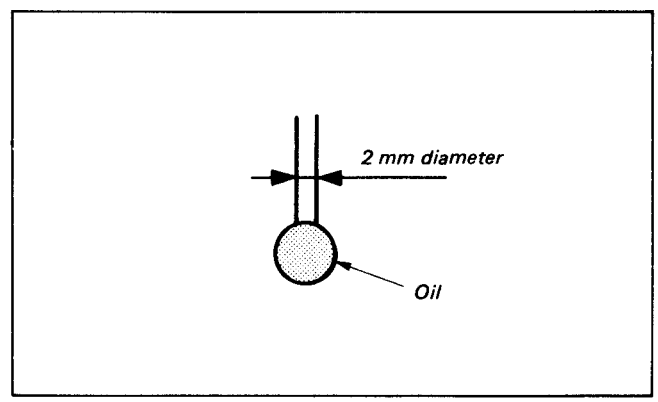

Fig. 2-11

2-2-5. Service Jig Table

Ref No.	Name	Part No.	Jig	Usage and Others
J1	Cleaning fluid	Y-2031-001-0		
J2	Chamois cloth	2-034-697-00		
J3	Head degausser	Widely available		
J4	Small adjustment mirror Spare mirror	J-6080-028-A J-6080-030-1	SL5052	Tape path
J5	Alignment tape (WR5-1C)	8-967-995-01		Tape path
J6	Dial tension gauge	J-6080-827-A		Various torque measurement
J7	Tension measurement reel	J-6080-831-A		With ϕ30 tape
J8	Tension measurement reel	J-6080-832-A		With ϕ16 string
J9	FWD and RVS winding torque cassette	J-6080-624-A	GD-2086	
J10	Rotary drum jig	(Packed with the repair rotary upper drum)		
J11	Screwdriver for tape path	J-6080-811-A		For tape guide adjustment
J12	Mode selector II panel	J-6080-844-A		
J13	Mode selector	J-6080-825-A		For all models
J14	Mode selector II conversion connector	J-6080-845-A		
J15	Tape end detecting filter	J-6080-848-A		Tape end detecting adjustment

Other equipment • Oscilloscope
• Analog tester (20 kΩ)

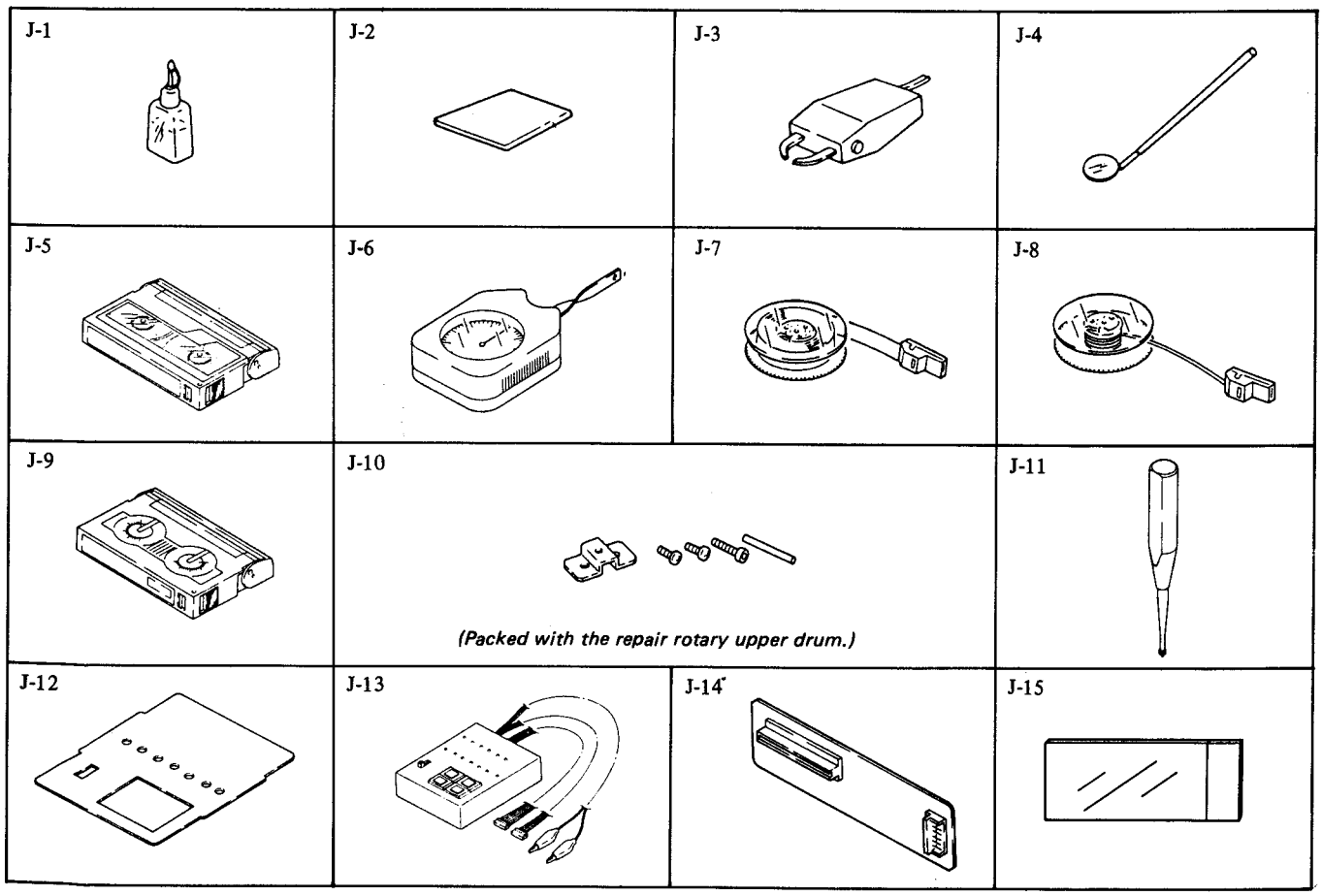

2-3. MECHANICAL CHECK, ADJUSTMENT AND REPLACEMENT

Note:

- **Use the mode selector (Ref. No. J-13) for this mechanical check, adjustment and replacement.**
- **The mode inside the ☐ is the mode set by pressing the mode selector button.**

2-3-1. Reel Lock Lever Assembly

1. Removal

1) By referring to 2-1-1 and 2-1-2, remove cassette arm assembly and LS cassette compartment assembly.
2) Remove tension spring ❶ from notch ❷.
3) Remove reel lock lever assembly ❹ from claw ❸ and shaft ❺. (See Fig. 2-12)

2. Installation

1) Install reel lock lever assembly ❹ to shaft ❺ and insert to claw ❸.
2) Hook the tension coil ❶ spring to notch ❷.
3) By referring to 2-1-1 and 2-1-2, install the cassette arm assembly and LS cassette compartment.

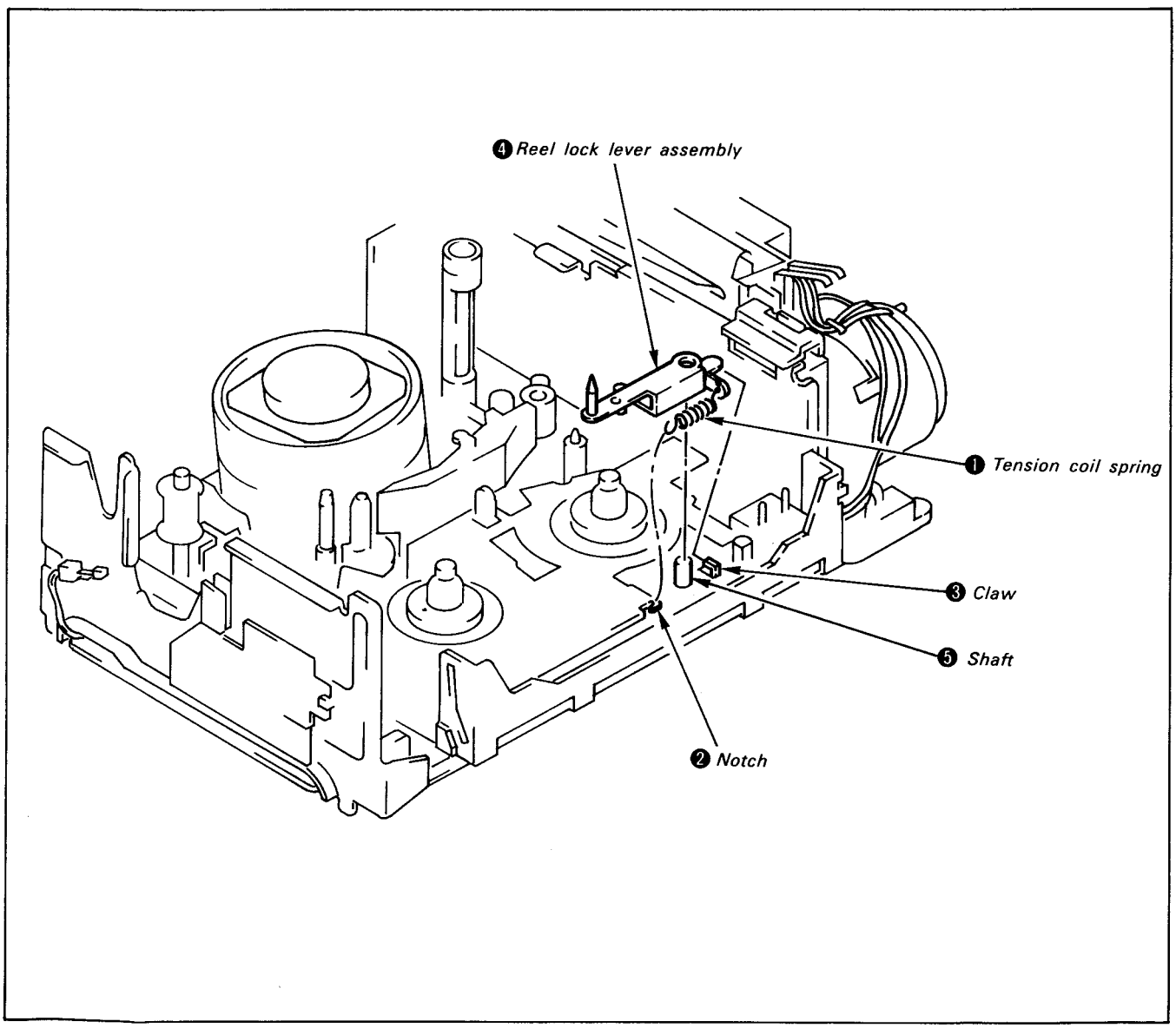

Fig. 2-12

2-3-2. Pendulum Stopper Plate

1. Removal

1) By referring to 2-1-1 and 2-1-2, remove the cassette arm assembly and LS cassette compartment assembly.
2) By referring to 2-3-1, remove reel lock lever assembly.
3) Push LED assembly 1 in the direction of arrow Ⓐ, and remove claw ❼.
4) Remove 2 screws ❷.
5) Remove pendulum stopper plate ❹ from the 2 positions of claws ❸.

Note:

As claw ❼ is easily broken, precaution should be taken in installation and removal. (See Fig. 2-13)

2. Installation

1) Set in GUIDE LOAD mode, and wind TG-1 band assembly ❺ tightly to S reel.
2) See to it that the LED assembly ❶ is mounted on the pendulum stopper plate ❹, and fasten to 2 positions of the claw and 2 positions of the dowel.
3) Install 2 screws ❷.
4) Hook claw ❻ of LED assembly ❶, and insert by pushing in the direction of arrow Ⓑ.
5) Set to EJECT mode.
6) By referring to 2-3-1, install the reel lock lever assembly.
7) By referring to 2-1-1 and 2-1-2, install the cassette arm assembly and LS cassette compartment assembly.

Note:

Caution should be taken that the TG-1 band assembly ❺ is not clasped in when installing the pendulum stopper plate.

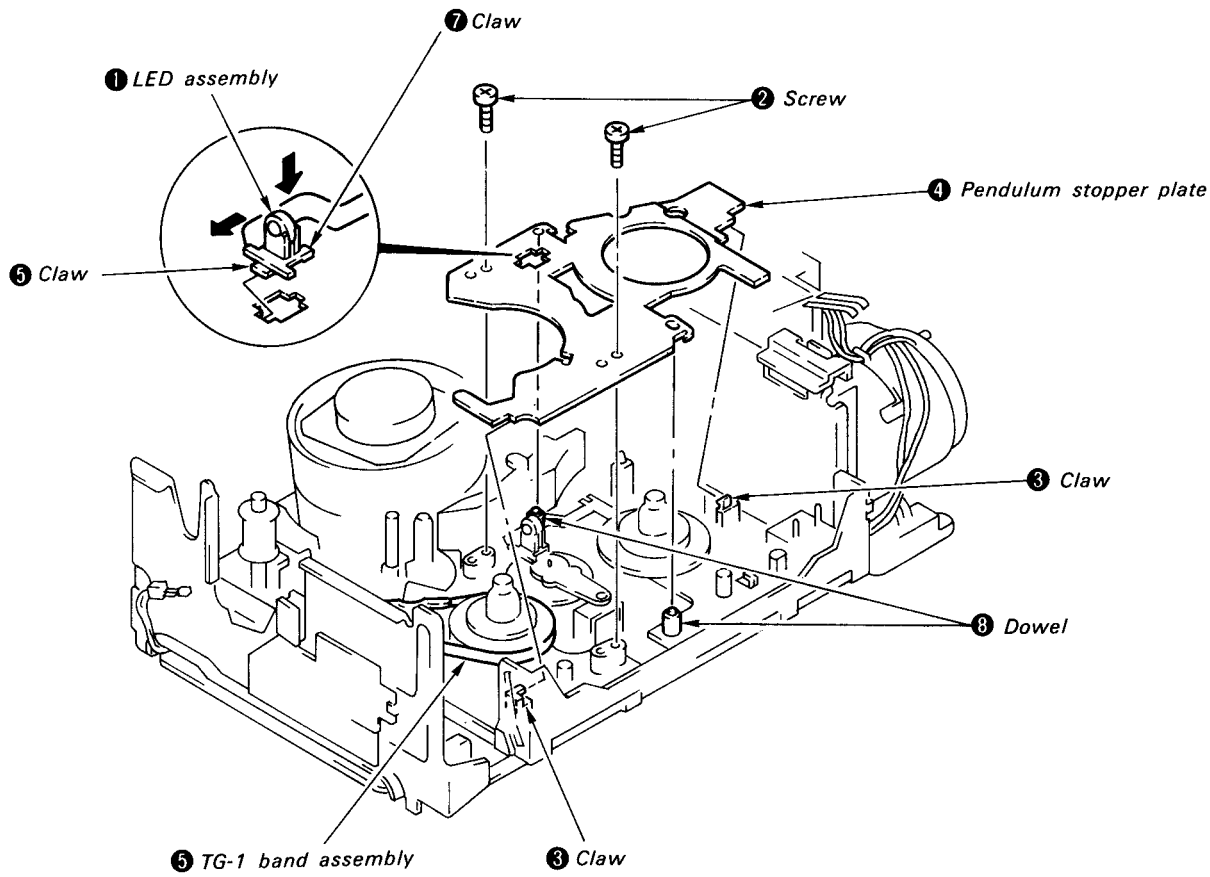

Fig. 2-13

2-3-3. S Reel Table Assembly

1. Removal

1) By referring to 2-1-1 and 2-1-2, remove cassette arm assembly and LS cassette compartment assembly.
2) By referring to 2-3-1, remove reel lock lever assembly.
3) By referring to 2-3-2, remove pendulum stopper plate.
4) Remove 1 screw ❶, and remove one side of TG-1 band assembly ❷.
5) Move the soft brake ❸ in the direction of arrow Ⓐ.
6) Remove S reel table assembly ❹. (See Fig. 2-14)

Note:

Perform removal of S reel table assembly by holding the * marked section of reel claw.

2. Installation

1) Apply over 1/3 drop and below 1/2 drop of oil to the arrow section of shaft ❺, as in Fig. B.
2) Move soft brake ❸ in the direction of arrowⒶ.
3) Install S reel table assembly ❹ to the shaft.
4) Install screw ❶ to TG-1 band assembly ❷ in the 2) state.
5) By referring to 2-3-2, install pendulum stopper plate.
6) By referring to 2-3-1, install reel lock lever assembly.
7) By referring to 2-1-1, install cassette arm assembly and LS cassette compartment assembly.

Note:

By referring to 2-3-27, perform check of reel table height.

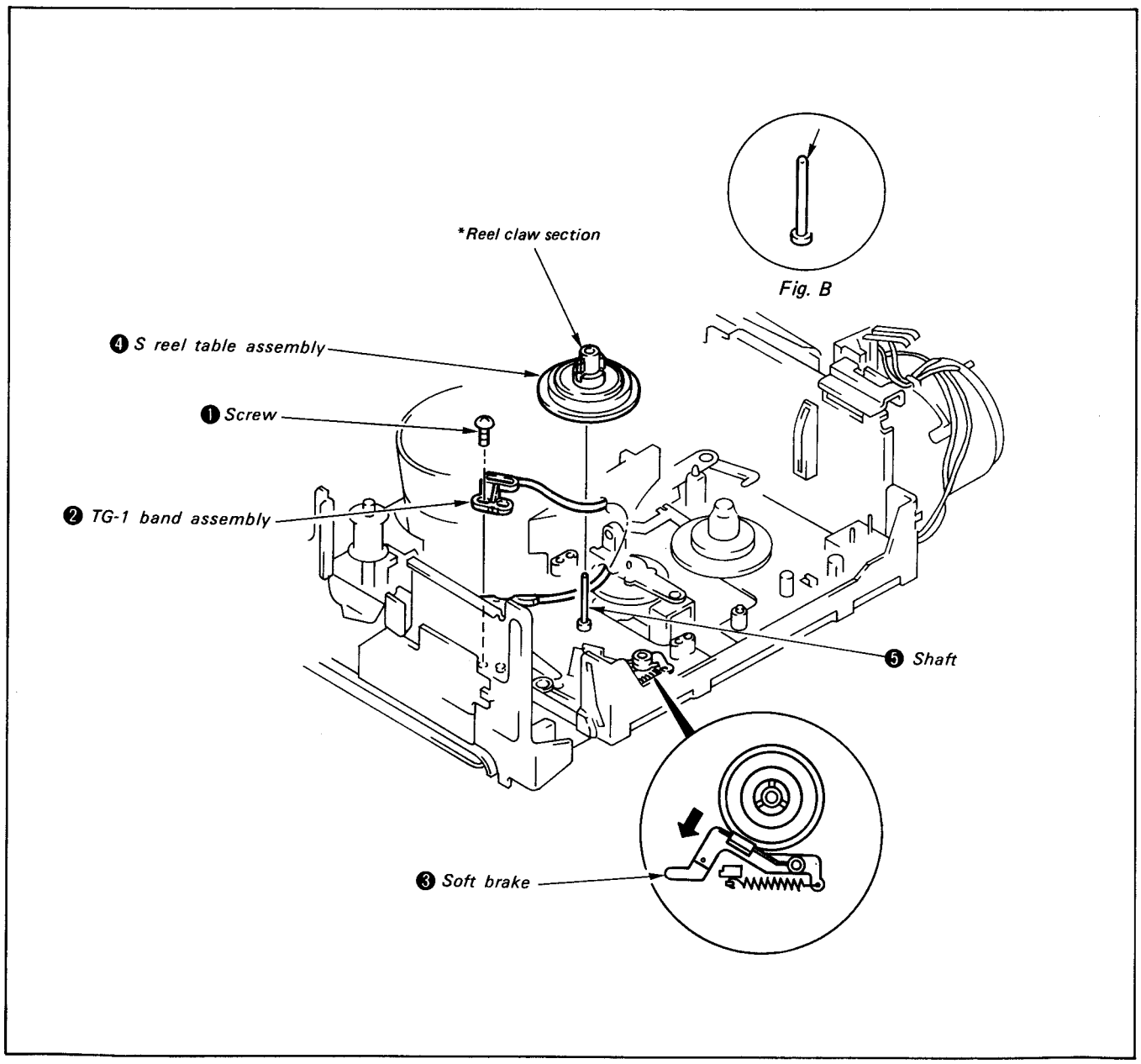

Fig. 2-14

2-3-4. T Reel Table Assembly

1. Removal

1) By referring to 2-1-1, remove the cassette arm assembly and LS cassette compartment assembly.
2) By referring to 2-3-1, remove reel lock lever assembly.
3) By referring to 2-3-2, remove pendulum stopper plate.
4) Remove T reel table assembly ❶. (See Fig. 2-15)

Note:

Perform removal of T reel table assembly ❶ by holding the reel claw section marked with *.

2. Installation

1) Apply over 1/3 drop and below 1/2 drop of oil to the arrow section of shaft ❷, as in Fig. A.
2) Install T reel table assembly ❶ to shaft ❷.
3) By referring to 2-3-2, install pendulum stopper plate.
4) By referring to 2-3-1, install reel lock lever assembly.
5) By referring to 2-1-1 and 2-1-2, install cassette arm assembly and LS cassette compartment assembly.

Note:

By referring to 2-3-27, perform check of reel table height.

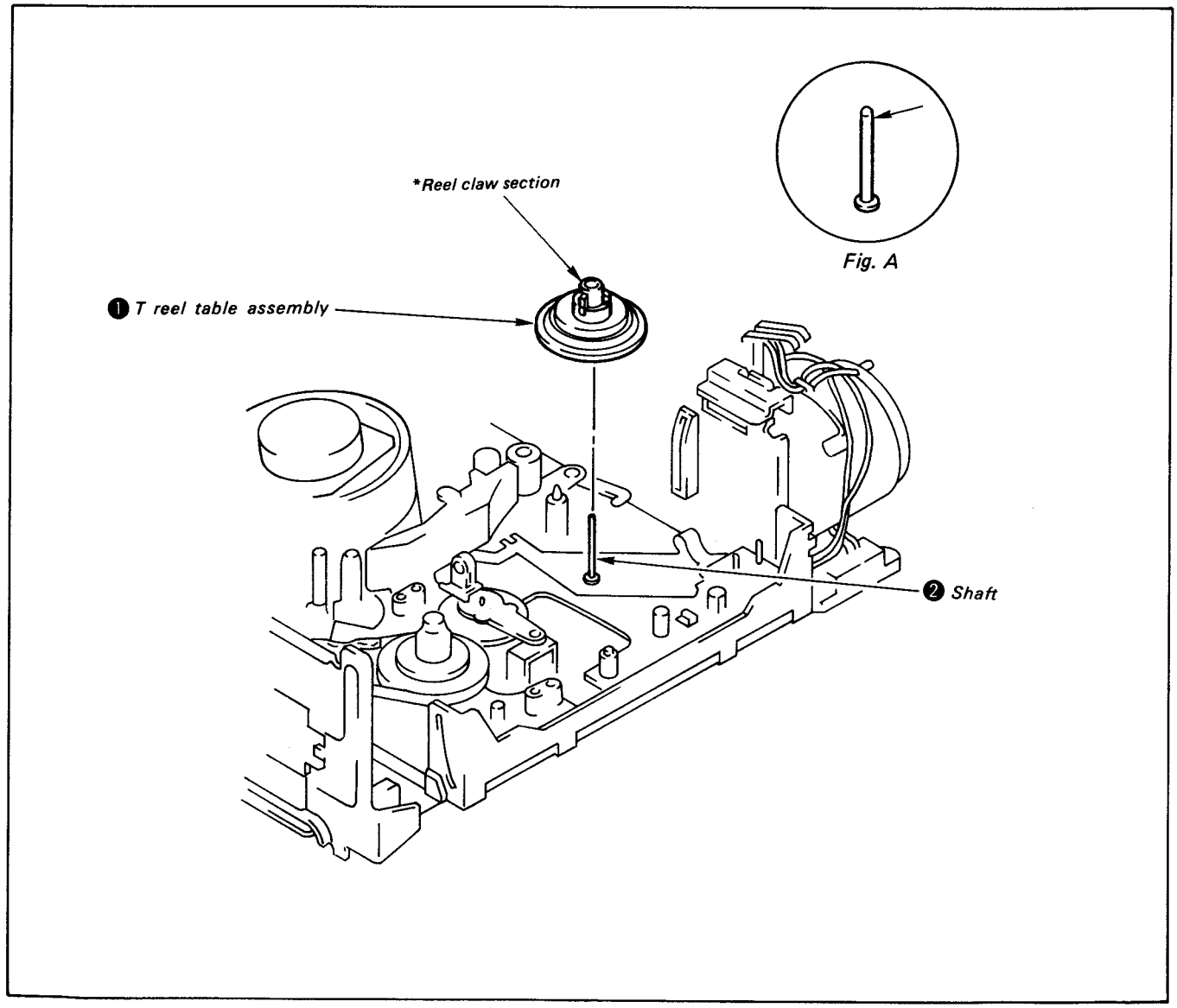

Fig. 2-15

2-3-5. Pinch Arm B Assembly

1. Removal

1) By referring to 2-1-1 and 2-1-2, remove cassette arm assembly and LS cassette compartment.
2) By referring to 2-3-1, remove reel lock lever assembly.
3) By referring to 2-3-2, remove pendulum stopper plate.
4) By referring to 2-3-4, remove T reel table assembly.
5) Remove tension coil spring ❶ from claw ❷.
6) Remove stopper washer ❸, and remove pinch arm B assembly ❹. (See Fig. 2-16)

2. Installation

1) Apply molten grease to the arrow section of pinch arm B assembly ❹, as shown in Fig. A.
2) Apply over 1/3 drop and below 1/2 drop of oil to the arrow section of shaft ❺, as shown in Fig.B.
3) See to it that pinch arm B assembly ❹ pin enters hole ❻ and pinch arm A ❼, and install to shaft ❺.
4) Install stopper washer ❸.
5) Hook the tension coil spring ❶ onto claw ❷.
6) By referring to 2-3-4, install T reel table assembly.
7) By referring to 2-3-2, install pendulum stopper plate.
8) By referring to 2-3-1, install reel lock lever assembly.
9) By referring to 2-1-1 and 2-1-2, install cassette arm assembly and LS cassette compartment assembly.

Note:

By referring to 2-3-28, perform pinch stroke adjustment.

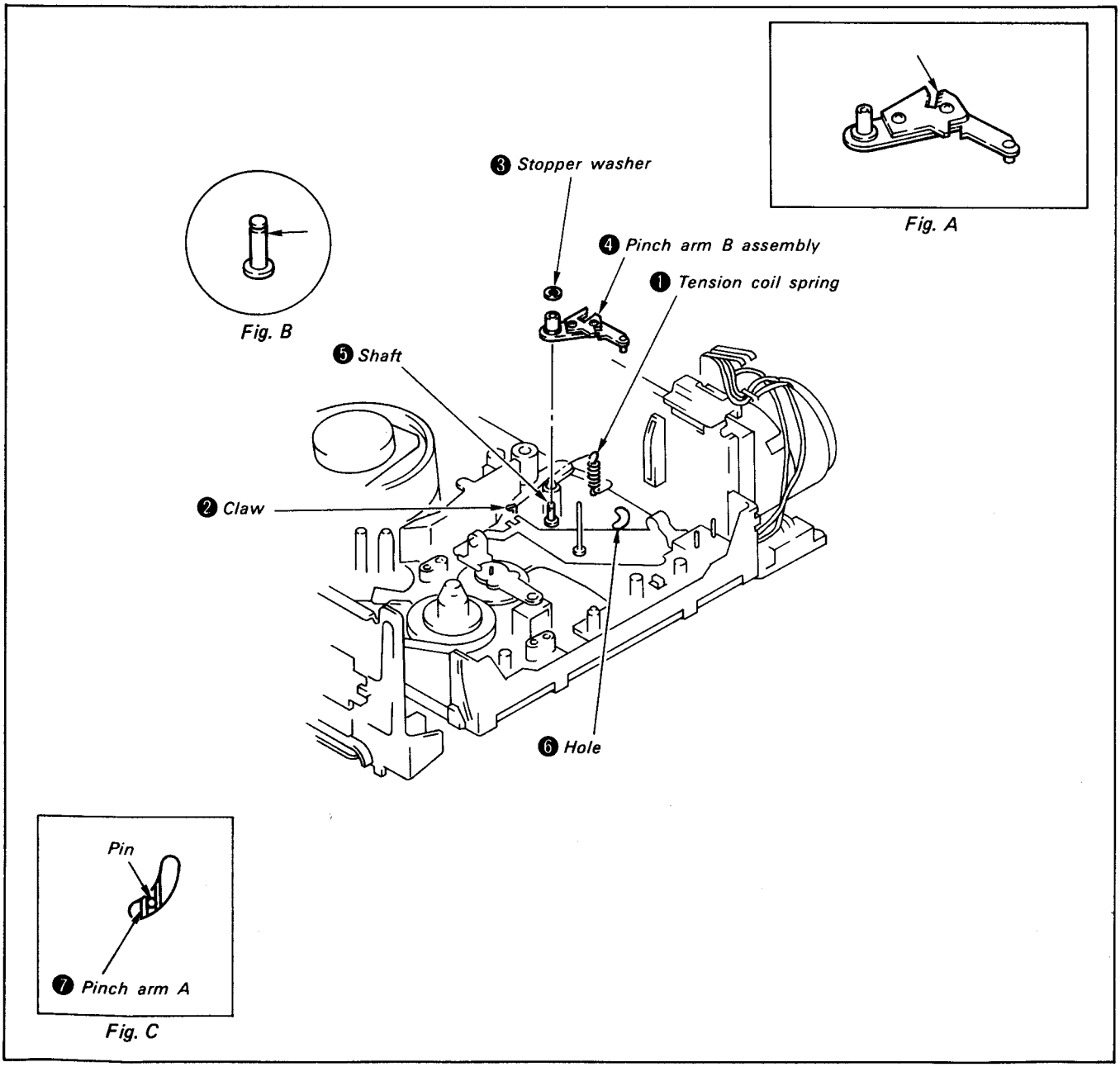

Fig. 2-16

2-3-6. Pinch Arm C Assembly

1. Removal

1) By referring to 2-1-1 and 2-1-2, remove cassette arm assembly and LS cassette compartment assembly.
2) By referring to 2-3-1, remove reel lock lever assembly.
3) By referring to 2-3-2, remove pendulum stopper plate.
4) Remove tension coil lever ❶ from claw ❷.
5) Remove stopper washer ❸, and remove pinch arm C assembly ❹ and pinch lever assembly ❺.
6) Remove tension coil spring ❻, and disassemble pinch arm C assembly ❹ and pinch lever assembly ❺.

Note:

Do not touch the roller section marked with *. (See Fig. 2-17)

2. Installation

1) Apply molten grease to the arrow section of pinch arm C assembly ❹, as shown in Fig. A.
2) Apply over 1/3 drop and below 1/2 drop oil to the arrow section of shaft ❼, as shown in Fig. B.
3) Install pinch lever assembly ❺ to pin arm C assembly ❹, and hook on tension coil spring ❻.
4) Install pinch arm C assembly ❹ and pin lever assembly ❺ to shaft ❼.
5) Install stopper washer ❸.
6) Hook tension coil spring ❶ to claw ❷.
7) By referring to 2-3-2, install pendulum stopper plate.
8) By referring to 2-3-1, install reel lock lever assembly.
9) By referring to 2-1-1 and 2-1-2, install cassette arm assembly and LS cassette compartment assembly.

Note:

By referring to 2-3-28, perform pinch stroke adjustment.

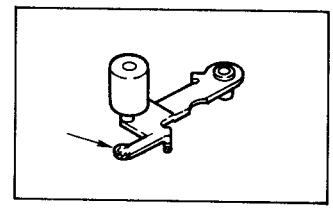

Fig. A

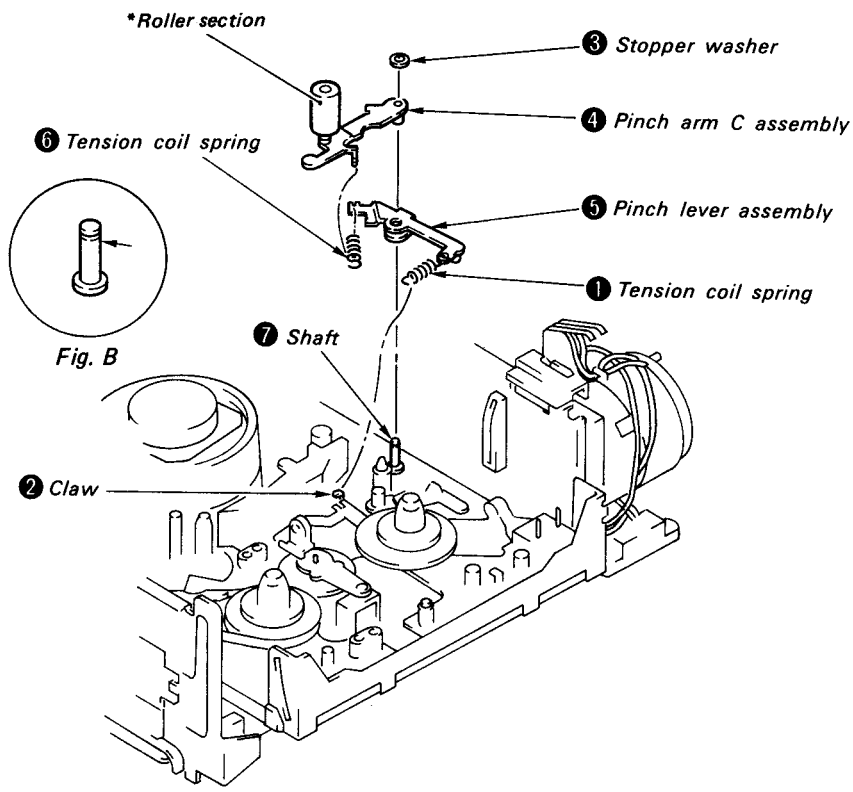

Fig. B

Fig. 2-17

2-3-7. TG-1 Arm Assembly

1. Removal

1) By referring to 2-1-1 and 2-1-2, remove cassette arm assembly and LS cassette compartment assembly.
2) By referring to 2-3-1, remove reel lock lever assembly.
3) By referring to 2-3-2, remove pendulum stopper plate.
4) Remove stopper washer ❶, and remove 1 screw ❷.
5) Remove tension coil spring ❸, and remove TG-1 arm assembly ❹. (See Fig. 2-18)

Note:

Do not touch the shoe section marked with *, (see Fig. 2-19) and guide section marked with *.

2. Installation

1) Apply over 1/3 drop and below 1/2 drop of oil to the arrow section of shaft ❺, as shown in Fig. A.
2) Install TG-1 arm assembly ❹ to shaft ❺.
3) Move soft brake ❻ in the direction of arrow Ⓒ, wind the TG-1 band assembly ❽ around the outer circumference of S reel table assembly ❼, and install 1 screw ❷.
4) Install stopper washer ❶.
5) Hook tension coil spring ❸ onto the position indicated in Fig. B.
6) By referring to 2-3-2, install pendulum stopper plate.
7) By referring to 2-3-1, install reel lock lever assembly.
8) By referring to 2-1-1 and 2-1-2, install cassette arm assembly and LS cassette compartment assembly.

Notes:

1) Be careful so as not to have any curving in the TG-1 band assembly ❽.
2) By referring to 2-3-31, perform tension regulator position adjustment.
3) By referring to 2-3-32, perform FWD back tension adjustment.

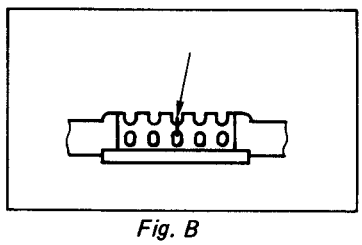

Fig. B

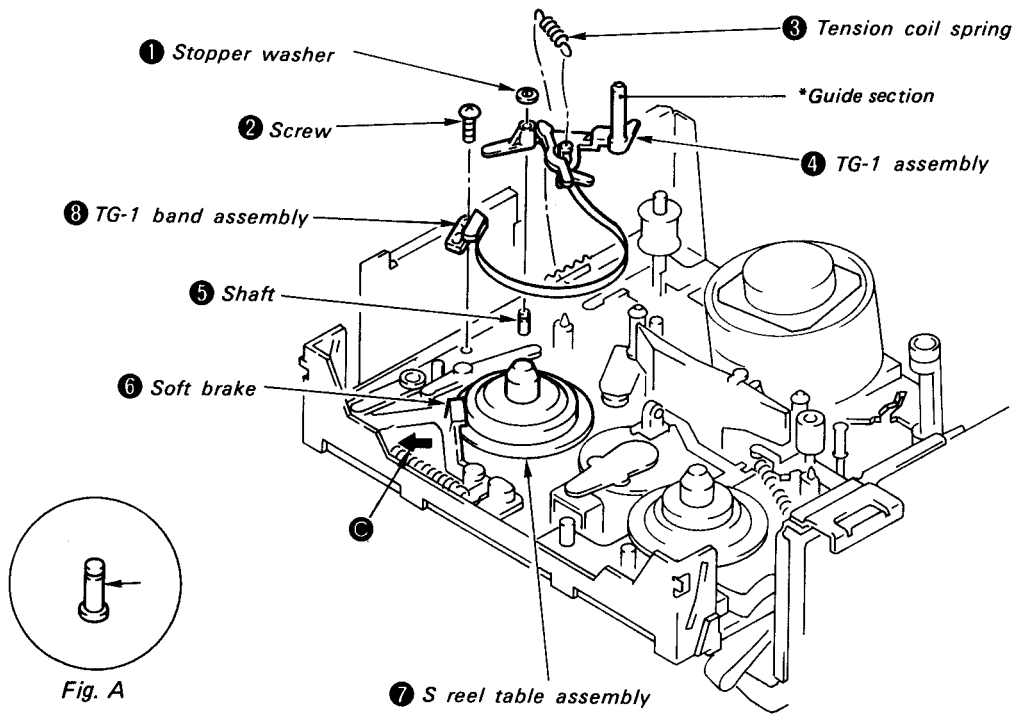

Fig. A

Fig. 2-18

2-3-8. TG-1 Band Assembly

1. Removal

1) By referring to 2-3-7, remove TG-1 arm assembly.
2) Remove claw ❷ of TG-1 band assembly from TG-1 arm assembly ❸. (See Fig.2-19)

2. Installation

1) Install claw ❷ of TG-1 band assembly ❶ into hole of TG-1 arm assembly ❸.
2) By referring to 2-3-7, install TG-1 arm assembly.

Notes:

1) Be careful so as not to have any curving in the TG-1 band assembly ❶.

2) Do not touch the shoe section marked with * and guide section marked with *.

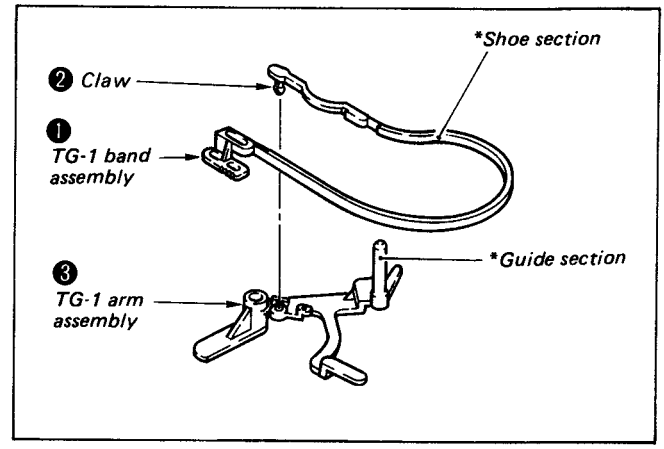

Fig. 2-19

2-3-9. Soft Brake Assembly

1. Removal

1) By referring to 2-1-1 and 2-1-2, remove cassette arm assembly and LS cassette compartment assembly.
2) By referring to 2-3-1, remove reel lock lever assembly.
3) By referring to 2-3-2, remove pendulum stopper plate.
4) Remove tension coil spring ❶ from claw ❷.
5) Remove soft brake assembly ❸. (See Fig. 2-20)

2. Installation

1) Install soft brake assembly. At this time place the Ⓐ section under the LS spring ❹.
2) Hook tension coil spring ❶ onto claw ❷.
3) By referring to 2-3-2, install reel lock lever assembly.
4) By reffering to 2-3-1, install reel lock lever.
5) By reffering to 2-1-1 and 2-1-2, install cassette arm assembly and LS cassette compartment assembly.

Note:

By reffering to 2-3-29, perform soft brake torque check.

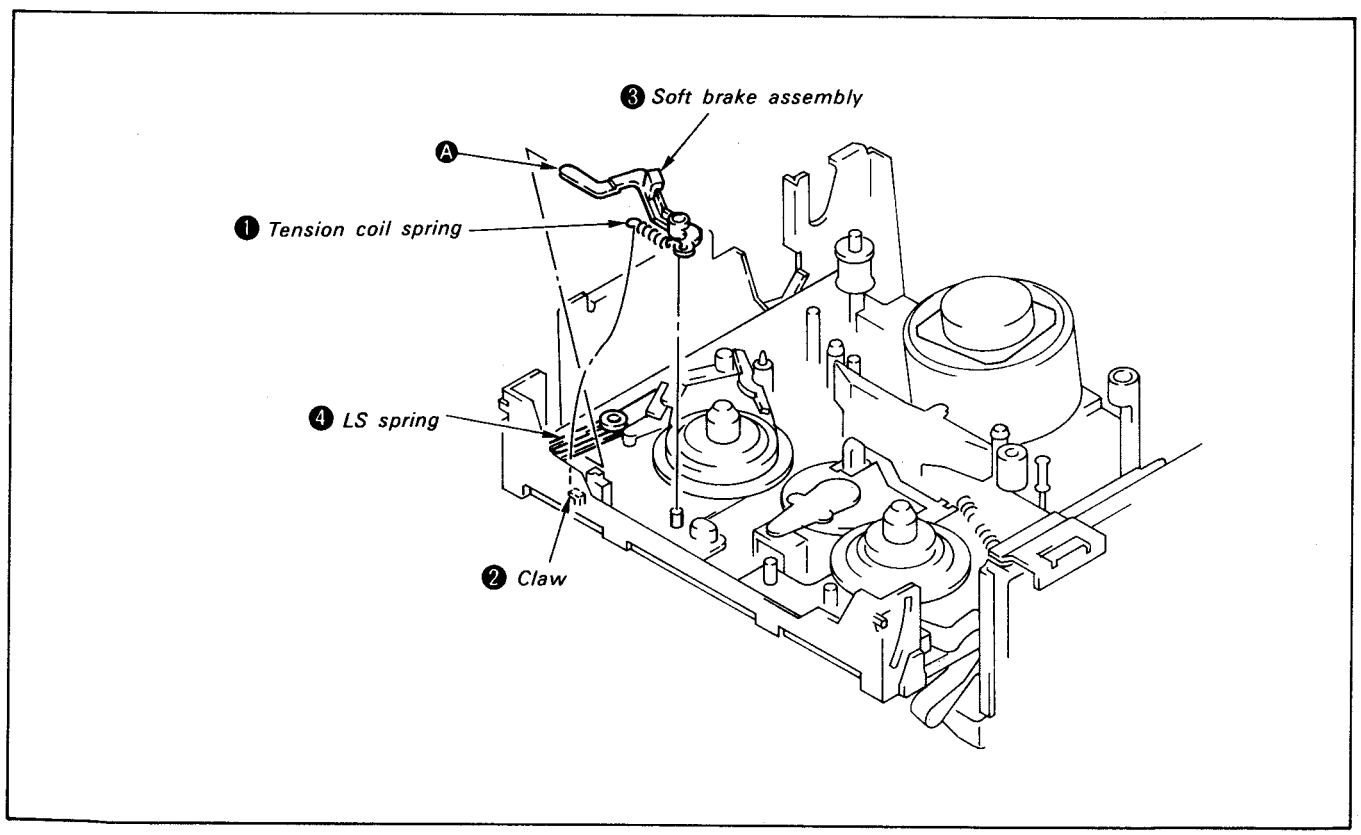

Fig. 2-20

2-3-10. LS Chassis Assembly

1. Removal

1) By reffering to 2-1-1 and 2-1-2, remove cassette arm assembly and LS cassette compartment assembly.
2) Set to GUIDE LOAD after BLANK.
3) Remove stopper washer ❶.
4) Remove 2 each of screw ❷ and LS guide ❸.
5) Remove LS chassis assembly ❹ in the direction of arrow Ⓐ.
6) Remove 7 sections of the soldered sections ❻ of FP-8 flexible board ❺ with a soldering iron, as shown in Fig.B, and remove FP-8 flexible board ❺ which is stuck to the mechanical chassis. (See Fig. 2-21)

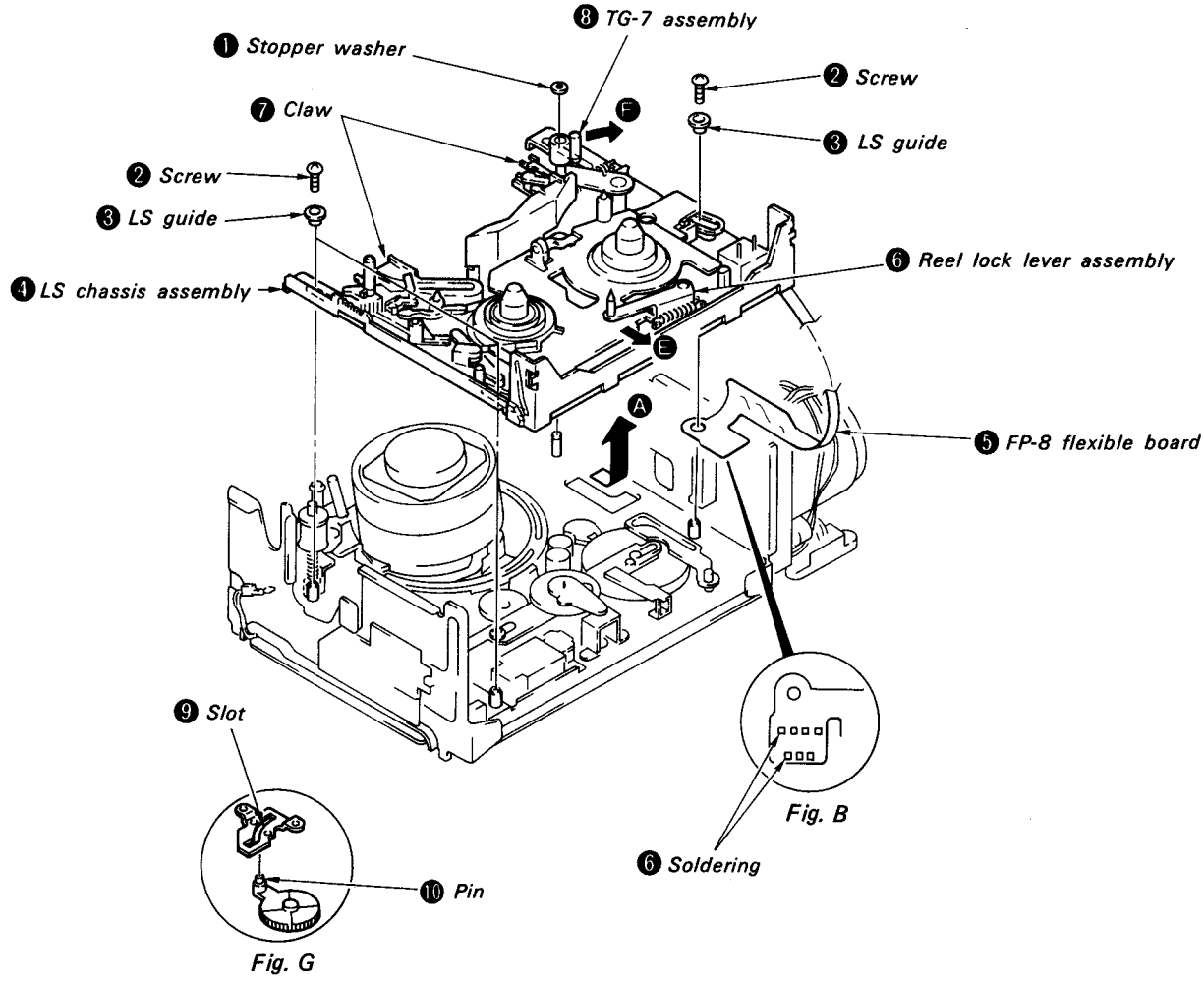

Fig. B

Fig. G

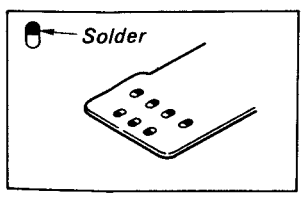

Fig. C

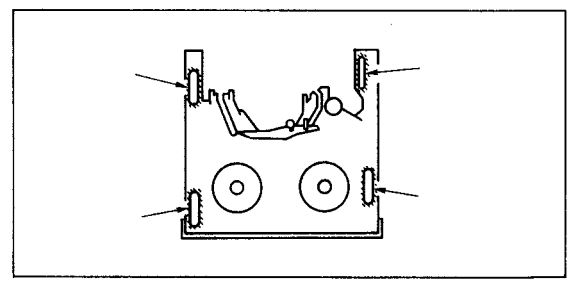

Fig. D

Fig. 2-21

2. Installation

1) Peel off tape attached to the rear of FP-8 flexible board ❺, and stick on by matching the shaft of the mechanical chassis with the pattern.
2) Solder the sections of the FP-8 flexible board ❺, as shown in Fig. C.
3) Apply molten grease to the arrow section of LS chassis assembly ❹, as shown in Fig. D.
4) Move reel lock lever assembly ❻ in the direction of arrow Ⓔ, and install by matching the 4 positions of the attachment holes of LS chassis assembly ❹ with the shaft of the mechanical chassis.
5) Engage 2 positions of claw ❼ to drum base.
6) Move TG-7 assembly ❸ in the direction of arrow Ⓕ, and insert into the hole of the mechainical chassis.
7) Insert pin ❿ of LS gear assembly to slot ❾ of LS cam plate, as shown in Fig. G.
8) Confirm that it is completely installed, and install 2 each of LS guides ❸ and screws ❷ respectively.
9) Install stopper washer ❶.
10) By reffering to 2-1-1 and 2-1-2, install cassette arm assembly and LS cassette compartment assembly.

Note:

Perform soldering at 260° C and within 5 seconds.

2-3-11. TG-7 Assembly

1. Removal

1) By reffering to 2-1-1 and 2-1-2, remove cassette arm assembly and LS cassette compartment assembly.
2) By reffering to 2-3-10, remove LS chassis assembly.
3) Turn over LS chassis assembly.
4) Remove stopper washer ❶ (f = 0.13 mm) and stopper washer ❷ (f = 0.3 mm).
5) Remove TG-7 spring ❹ from claw ❺, and remove TG-7 assembly ❸. (See Fig. 2-22)

Note:

As the FP-8 flexible board* is connected to the mechanical chassis, caution should be taken that it is not broken off.

2. Installation

1) Apply over 1/3 drop and below 1/2 drop of oil to the arrow section of shaft, as shown in Fig. A.
2) Install TG-7 assembly ❸ by way of TG-7 spring ❹.
3) Hook TG-7 spring ❹ onto claw ❺.
4) Install stopper washer ❷ and stopper washer ❶ in that order.
5) By referring to 2-3-10, install LS chassis assembly.
6) By reffering to 2-1-1 and 2-1-2, install cassette arm assembly and LS cassete compartment assembly.
7) Perform presetting of TG-7 height.

Note:

Confirm that stopper washers ❶ and ❷ are completely inserted into the notch of the shaft.

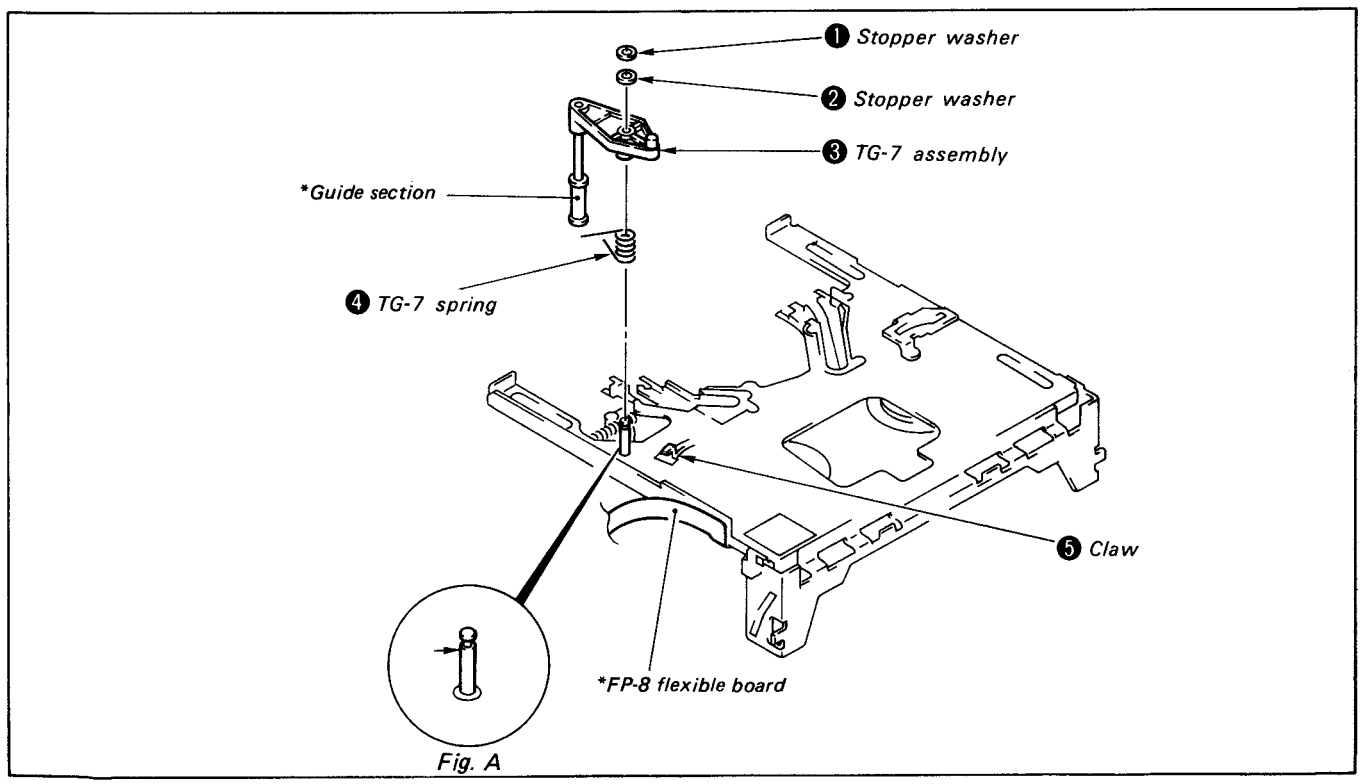

Fig. 2-22

2-3-12. Pinch Arm A Assembly

1. Removal

1) By reffering to 2-1-1 and 2-1-2, remove cassette arm assembly and LS cassette compartment assembly.
2) By reffering to 2-3-10, remove LS chassis assembly.
3) Remove stopper washer ❶.
4) Remove pinch arm A assembly ❷. (See Fig. 2-23)

2. Installation

1) Apply over 1/3 drop and below 1/2 drop of oil to arrow section of shaft, as shown in Fig. A.
2) Apply molten grease to arrow section of pinch arm A assembly ❷, as shown in Fig. B.
3) Insert pin of pinch arm A assembly ❷ into outer notch of cam assembly ❸, and install to shaft.
4) Install stopper washer ❶.
5) By referring to 2-3-10, install LS chassis assembly.
6) By referring to 2-1-1 and 2-1-2, install cassette arm assembly and LS cassette compartment assembly.

Note:

Confirm that stopper washer ❶ is completely inserted into shaft.

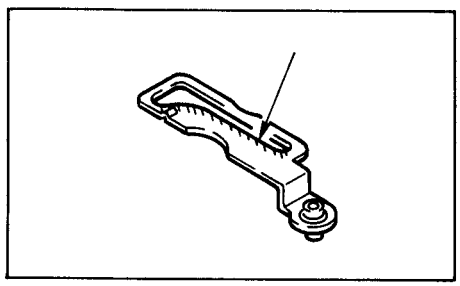

Fig. B

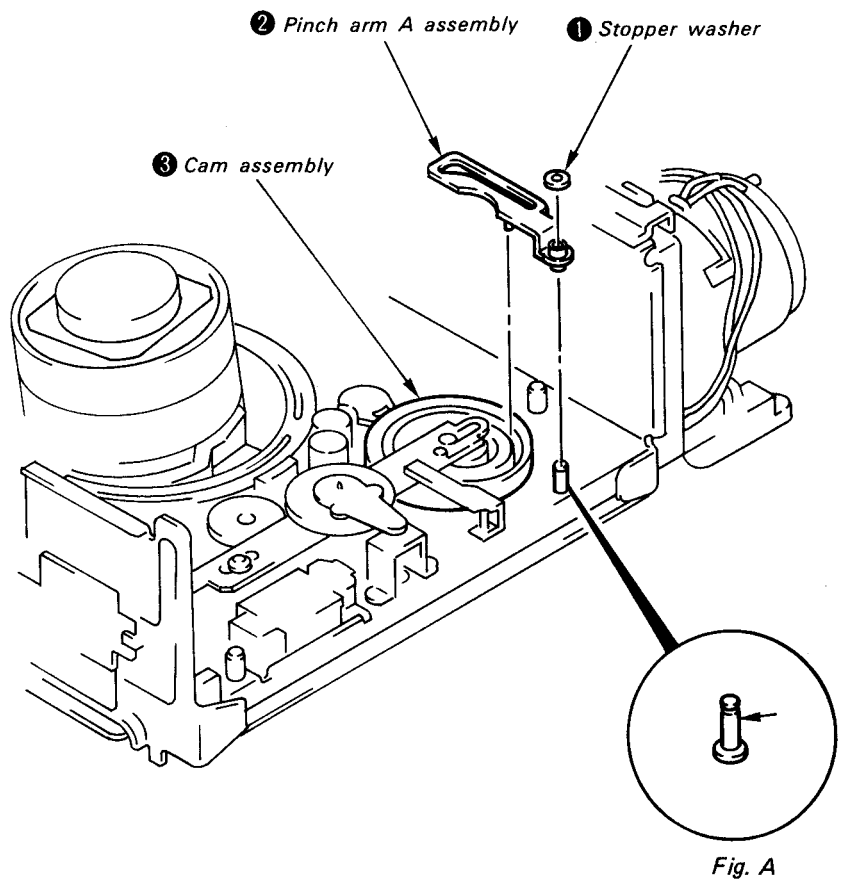

Fig. A

Fig. 2-23

2-3-13. M Slider Assembly

1. Removal

1) By referring to 2-1-1 and 2-1-2, remove the cassette arm assembly and LS cassette assembly.
2) By referring to 2-3-10, remove the LS chassis.
3) Remove pendulum gear arm.
4) Remove E ring ❷ and remove reel locking lever B ❸.
5) Remove screw ❹ and washer ❺.
6) Remove lock washer ❻ and M slider assembly ❼. (See Fig. 2-24)

2. Installation

1) Apply molten grease to the arrow marked point of M slider assembly ❼, as shown in Fig. A.
2) Insert pin of the M slider assembly ❼ into the inner notch of cam assembly ❽ and install.
3) Remove lock washer ❻, washer ❺ and screw ❹.
4) Apply molten grease to the arrow marked point of reel lock lever B ❸, as shown in Fig. B.
5) Apply over 1/3 drop and below 1/2 drop of oil to the arrow marked point on the shaft, as shown in Fig. C.
6) Install reel lock lever so as to be inserted in between the notch and protrusion, as shown in Fig. D.
7) Install E ring ❷.
8) Install pendulum gear arm ❶.
9) By referring to 2-3-10, install LS chassis assembly.
10) By referring to 2-1-1 and 2-1-2, install cassette arm assembly and LS cassette compartment assembly.

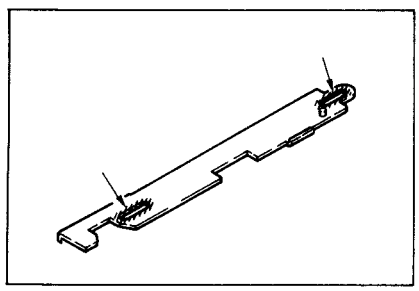

Fig. A

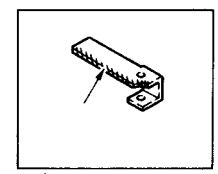

Fig. B

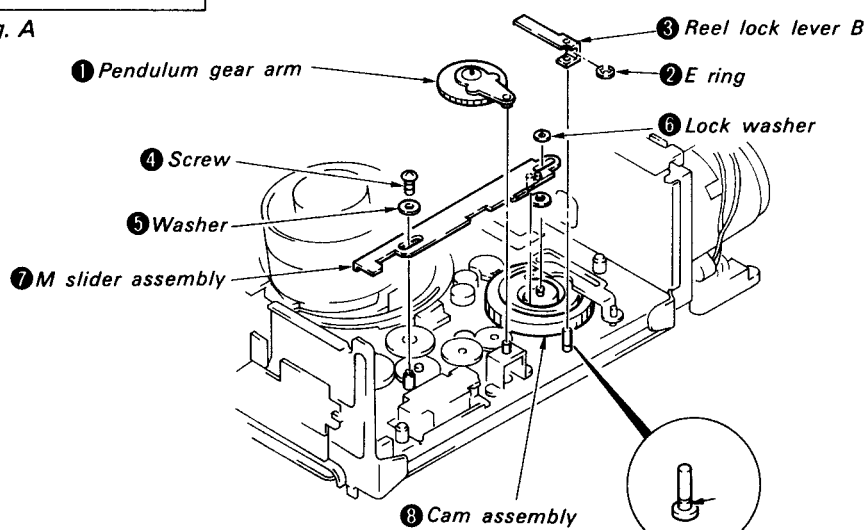

Fig. C

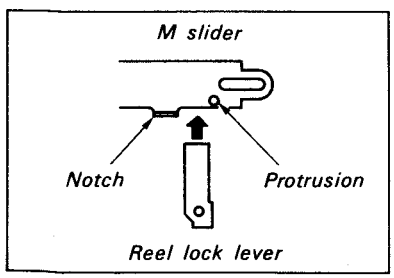

Fig. D

Fig. 2-24

2-3-14. TG-4 Base Assembly and TG-5 Base Assembly

1. Removal

1) By referring to 2-1-1 and 2-1-2, remove cassette arm assembly and LS cassette compartment assembly.
2) By referring to 2-3-10, remove LS chassis assembly.
3) Set into GUIDE LOAD mode and remove TG-4 base assembly ❶ and TG-5 base assembly ❷ from the groove of the drum base.
4) Turn pin ❹ of TG-4 base assembly ❶ in the direction of arrow Ⓐ and remove from notch ❸. (See Fig. 2-25)
5) Remove pin ❺ from the hole of notch ❸.
6) Remove TG-5 base assembly ❷ from notch ❼ by moving it in the direction of arrow Ⓐ (See Fig. 2-26)
7) Remove TG-5 base assembly ❷ from pin ❻. (See Fig. 2-27)

Note:

Be sure not to contact with the guide section marked with *.

2. Installation

1) Insert pin ❻ into the hole of TG-5 base assembly.
2) Insert TG-5 base assembly ❷ beneath notch ❼ by moving it in the direction of arrow B.
3) Insert pin ❺ of TG-5 base assembly ❶ into the hole of notch❸.
4) Set pin ❹ of TG-4 base assembly ❶ into notch ❸ by turning it in the direction of arrow Ⓑ.
5) Confirm that the TG-4 base assembly ❶ and TG-5 base assembly ❷ have been installed in the states as shown in Fig. C respectively.
6) Set TG-4 base assembly ❶ and TG-5 base assembly ❷ into the groove of the drum base while slowly turning BLANK after GUIDE LOAD mode. If the position are not matched, the assembly is caught by the entrance of the groove and, accordingly, it may be unable to move. Therefore, be sure to set it into the groove while matching the positions very carefully.
7) By referring to 2-3-10, install LS chassis assembly.
8) By referring to 2-1-1 and 2-1-2, install cassette arm assembly and LS cassette compartment assembly.

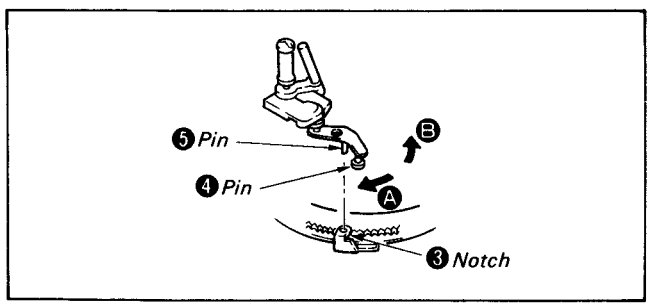

Fig. 2-25

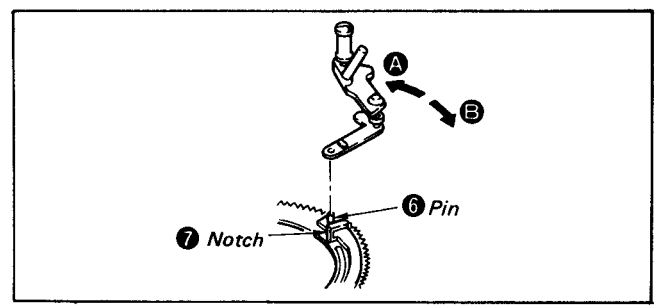

Fig. 2-26

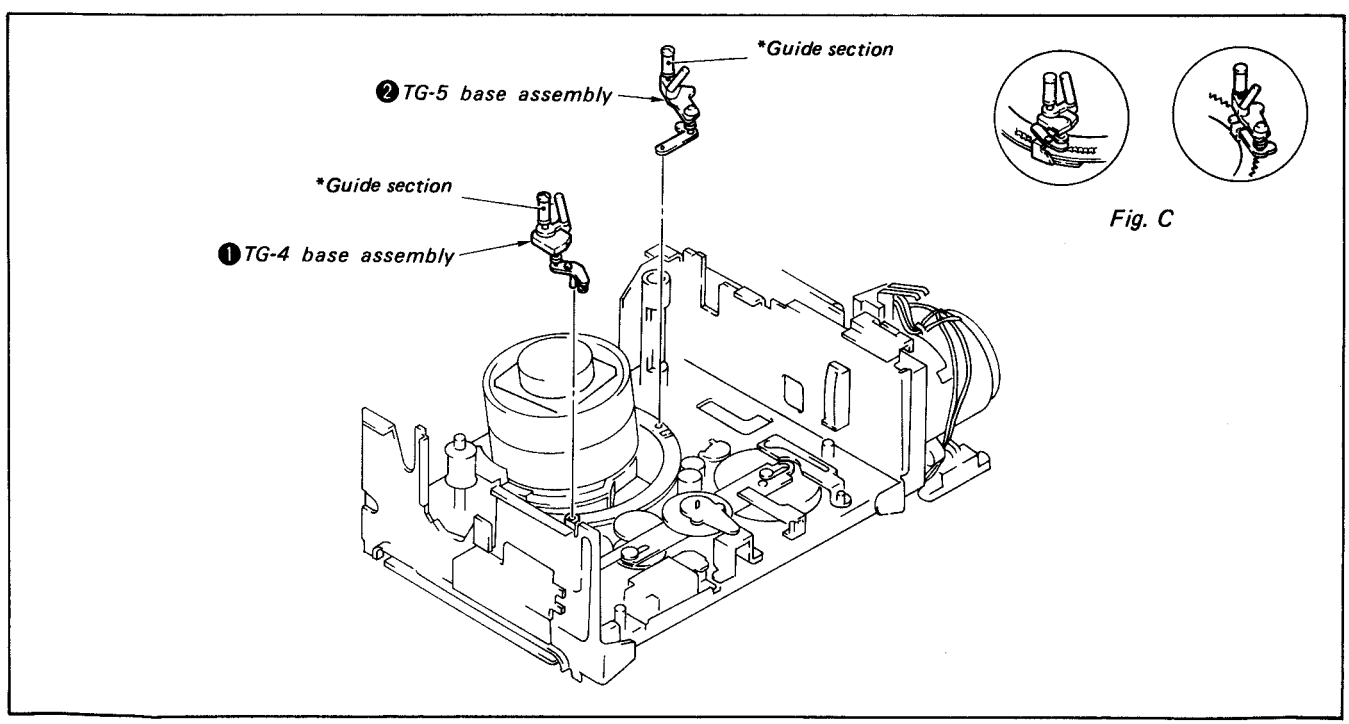

Fig. C

Fig. 2-27

2-3-15. Loading Slider T Assembly

1. Removal

1) By referring to 2-1-1 and 2-1-2, remove cassette arm assembly and LS cassette compartment assembly.
2) By referring to 2-3-10, remove LS chassis assembly.
3) By referring to 2-3-14, remove TG-4 base assembly and TG-5 base assembly.
4) By referring to 2-3-25, remove drum assembly.
5) Remove screw ❶ , and remove plate spring ❷ and T slider stopper ❸ .
6) Remove screw ❹ and remove slider supporter ❺ .
7) Remove 2 lock washers ❻ and remove loading slider T assembly ❼ . (See Fig. 2-28)

2. Installation

1) Apply molten grease to the arrow marked point of plate spring T ❷ , as shown in Fig.A.
2) Apply molten grease to the arrow marked point of loading slider T assembly ❼ , as shown in Fig. B.
3) Install loading slider T assembly ❼ by matching hole ❽ of the loading slider T assembly to hole ❾ of the loading slider S assembly.
4) Install 2 locking washers ❻ .
5) Install slider supporter ❺ with screw ❹ .
6) Install T slider stopper ❸ and plate spring ❷ with screw ❶ .
7) By referring to 2-3-14, install drum assembly.
8) By referring to 2-3-14, install TG-4 base assembly and TG-5 base assembly.
9) By referring to 2-3-10, install LS chassis assembly.
10) By referring to 2-1-1 and 2-1-2, install cassette arm assembly and LS cassette compartment assembly.

Notes:

1) Be sure to confirm that lock washer ❷ has been engaged completely into the groove of the shaft.

2) By referring to 2-3-17, perform phase adjustment after loading slider T assembly ❼ is installed.

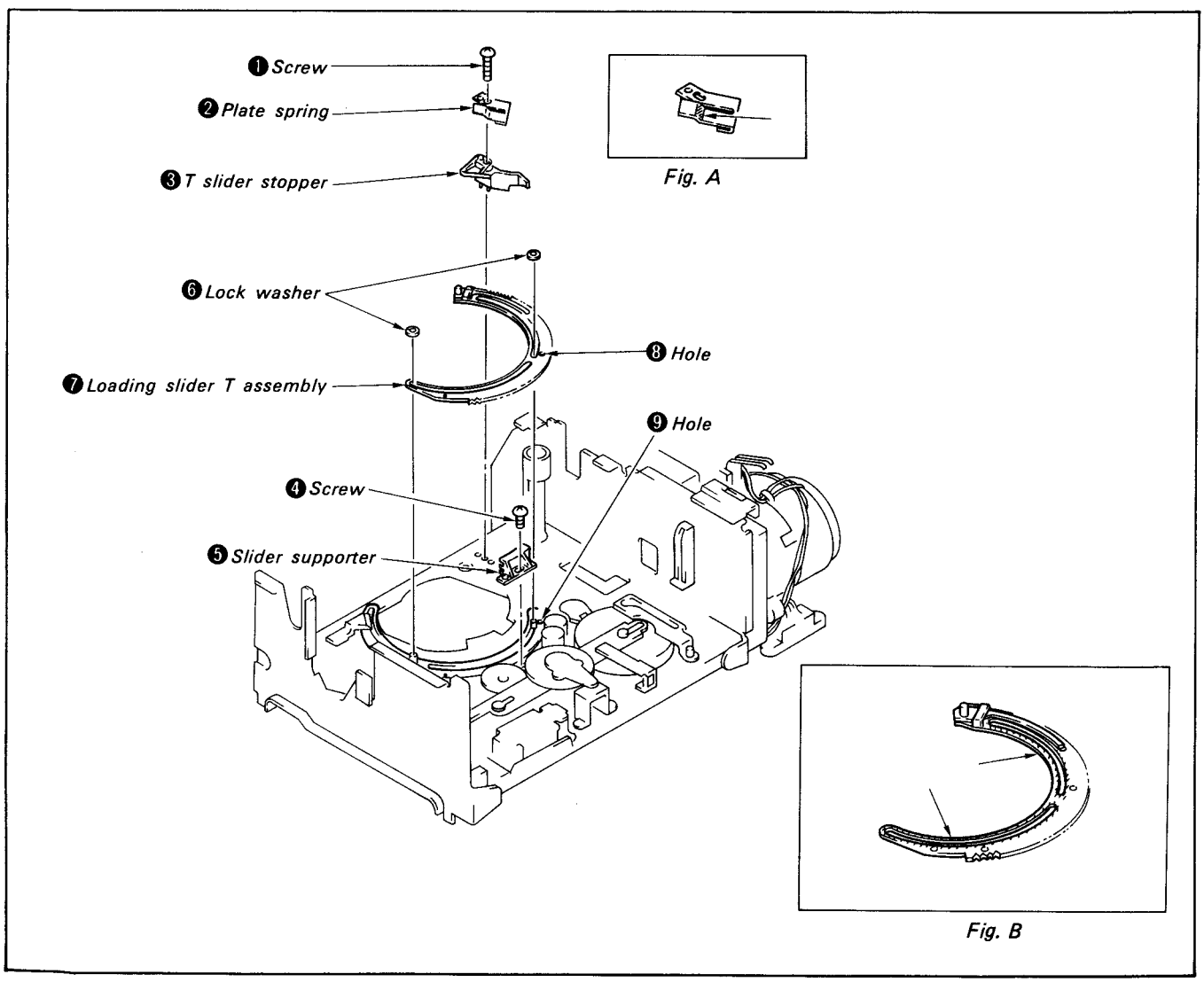

Fig. 2-28

2-3-16. Loading Slider S Assembly

1. Removal

1) By referring to 2-1-1 and 2-1-2, remove cassette arm assembly and LS cassette compartment assembly.
2) By referring to 2-3-10, remove LS chassis assembly.
3) By referring to 2-3-14, remove TG-4 base assembly and TG-5 base assembly.
4) By referring to 2-3-25, remove drum assembly.
5) By referring to 2-3-15, remove loading slider T assembly.
6) Remove screw ❶ and remove S slider stopper ❷ .
7) Remove 2 guide rollers ❸ and remove loading slider S assembly ❹.(See Fig.2-21)

2. Installation

1) Apply molten grease to the arrow marked point of shaft ❺, as shown in Fig. A.
2) Apply molten grease to the arrow marked point of loading slider S assembly ❹ , as shown in Fig.B.
3) Install loading slider S assembly ❹ by matching hole ❻ of loading slider S assembly to hole ❼ of the mechanical chassis.
4) Install 2 guide rollers ❸ .
5) Install 2 S slider stopper ❷ with screw ❶ .
6) By referring to 2-3-15, install loading slider T assembly.
7) By referring to 2-3-25, install drum assembly.
8) By referring to 2-3-14, install TG-4 base assembly and TG-5 base assembly.
9) By referring to 2-3-10, install cassette arm assembly and LS cassette compartment assembly.
10) By referring to 2-1-1 and 2-1-2, install cassette arm assembly and LS cassette compartment assembly.

Note:

By referring to 2-1-1 and 2-1-2, perform phase adjustment after loading slider T assembly has been installed.

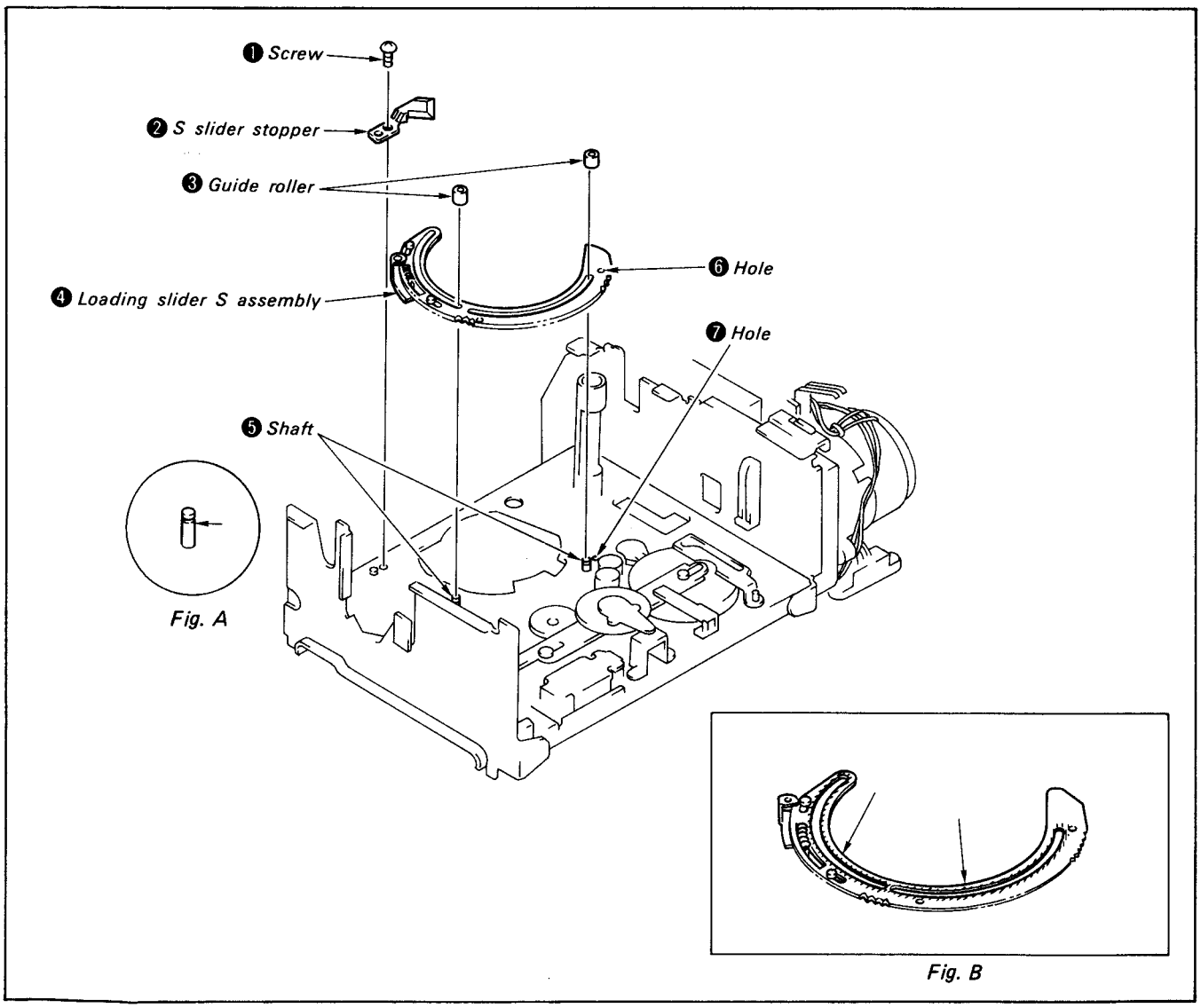

Fig. 2-29

2-3-17. Phase Adjustment

1. Removal

1) By referring to 2-1-1 and 2-1-2, remove cassette arm assembly and LS cassette compartment assembly.
2) By referring to 2-3-10, remove LS chassis.
3) By referring to 2-3-14, remove TG-4 base assembly and TG-5 base assembly.
4) By referring to 2-3-25, remove drum assembly. (See Fig. 2-30)

2. Adjustment

1) Confirm that it has been turned into BLANK after GUIDE LOAD mode.
2) Adjust the positions of the respective holes of loading slider T assembly ❷, loading slider S assembly ❸, and the mechanical chassis, and then insert a rod ❶ of approximately 1 mm in diameter into the holes.
3) Adjust the position of the hole of LS gear C assembly and the position of the hole of the mechanical chassis, and insert rod ❶ of aproximately 1 mm in diameter into the holes.
4) Adjust by turning loading gear M ❺ so that the mark on it comes to the loading gear S ❻ side, as shown in Fig. A.
5) Remove lock washer ❽ and LS gear A ❼, and adjust so that both holes of loading slider T assembly ❷ and LS gear A ❼ come on the same straight line as shown in Fig. B, and preform installation.
6) Install lock washer ❽.

Note:

Be sure to confirm that lock washer ❽ is set completely in the groove of the shaft.

3. Installation

1) By referring to 2-3-25, install drum assembly.
2) By referring to 2-3-14, install TG-4 base assembly and TG-5 base assembly.
3) By referring to 2-3-10, install LS chassis assembly.
4) By referring to 2-1-1 and 2-1-2, install cassette arm assembly and LS cassette assembly.

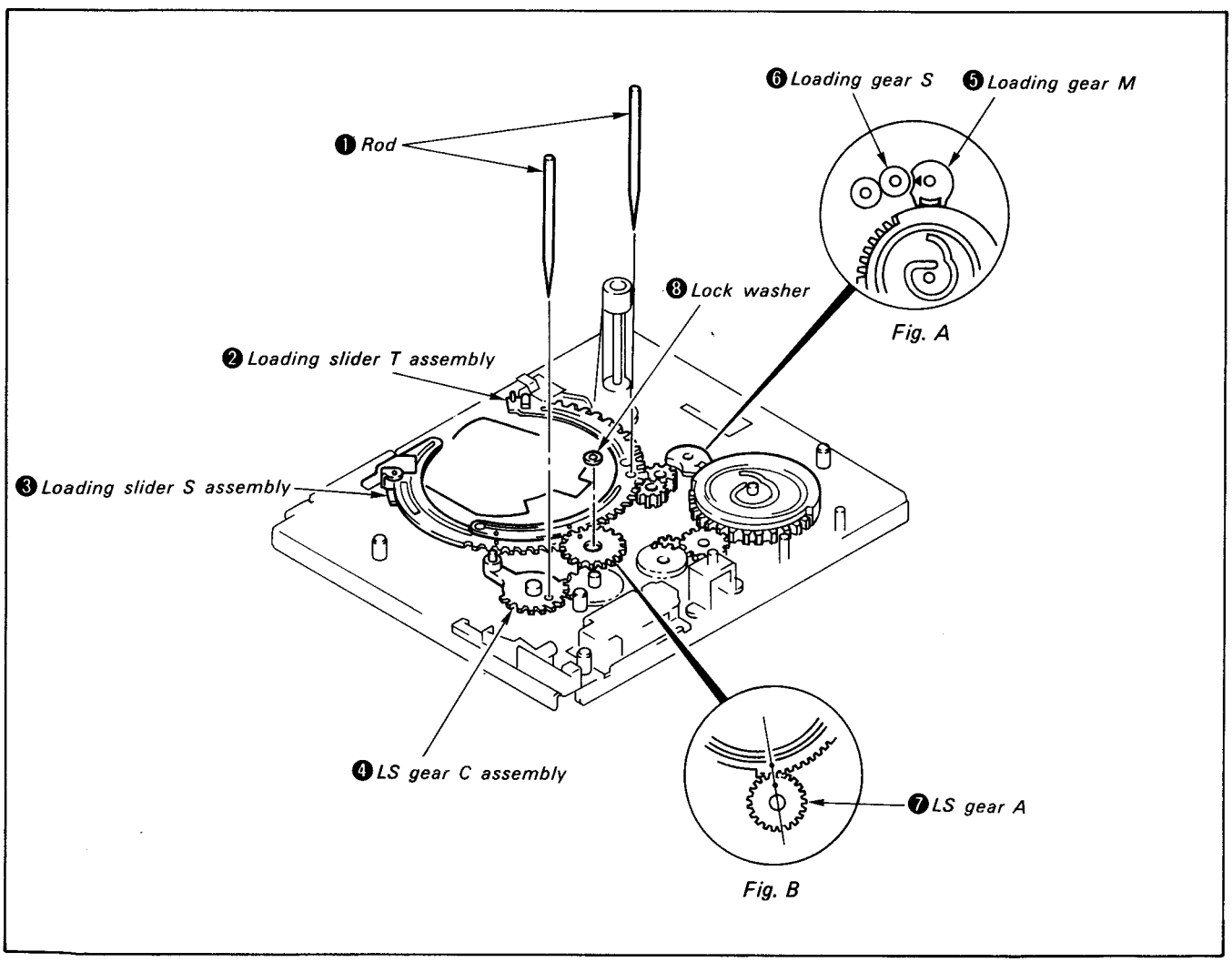

Fig. 2-30

2-3-18. Gear Train Operation Check

1. Removal

1) By referring to 2-1-1 and 2-1-2, remove cassette arm assembly and LS cassette compartment assembly.
2) By referring to 2-3-10, remove LS chassis assembly.
3) By referring to 2-3-14, remove TG-4 base assembly and TG-5 base assembly.
4) By referring to 2-3-35, remove drum assembly.
5) By referring to 2-3-21, remove LM motor assembly. (See Fig. 2-31)

2. Checking

1) Insert a point of tweezers into the hole of the cam assembly.
2) Rotate the cam assembly once around in the direction of arrow Ⓐ, and then once around in the direction of arrow Ⓑ. Repeat the above 3 times.
3) At this point, confirm that the individual gears and sliders shown in Fig. are being operated smoothly, and there are no abnormal loading.

Note:

When making cam assembly ❶ to rotate with the point of tweezers, exercise cautions so as not to cause flaw to the mechanical chassis.

3. Installation

1) By referring to 2-3-21, install LM motor assembly.
2) By referring to 2-3-25, install drum assembly.
3) By referring to 2-3-14, install TG-4 base assembly and TG-5 base assembly.
4) By referring to 2-3-10, install LS chassis assembly.
5) By referring to 2-1-1 and 2-1-2, install cassette arm assembly and LS cassette compartment assembly.

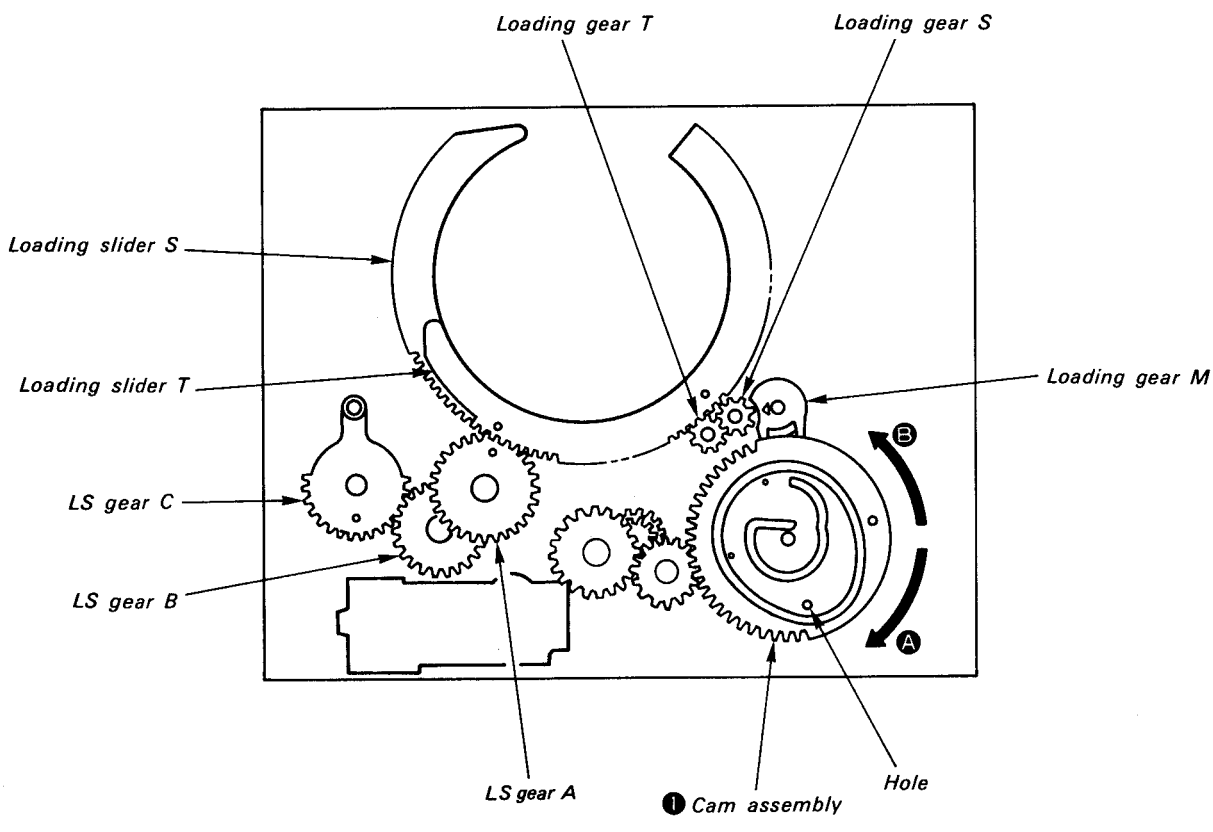

Fig. 2-31

2-3-19. FP-8 Board

1. Removal

1) By referring to 2-1-1 and 2-1-2, remove cassette arm assembly and LS cassette compartment assembly.
2) By referring to 2-3-10, remove LS chassis assembly.
3) By referring to 2-3-4, remove T reel table assembly.
4) Remove screw ❶ and peel off FP-8 board ❷ which is stuck to the LS chassis.
5) When peeling off FP-8 board 2, care must be taken so as not to tear it. (See Fig. 2-32)

2. Installation

1) Peel off the sheet covering of the adhesion tape on the rear side of FP-8 board ❷ and match the shaft hole to shaft ❸ of the LS chassis and claw, and thus the tape is adhered.
2) Adjust dowel ❺ and install it with screw ❶.
3) By referring to 2-3-4, install T reel table assembly.
4) By referring to 2-3-10, install LS chassis assembly.
5) By referring to 2-1-1 and 2-1-2, install cassette arm assembly and LS cassette compartment assembly.

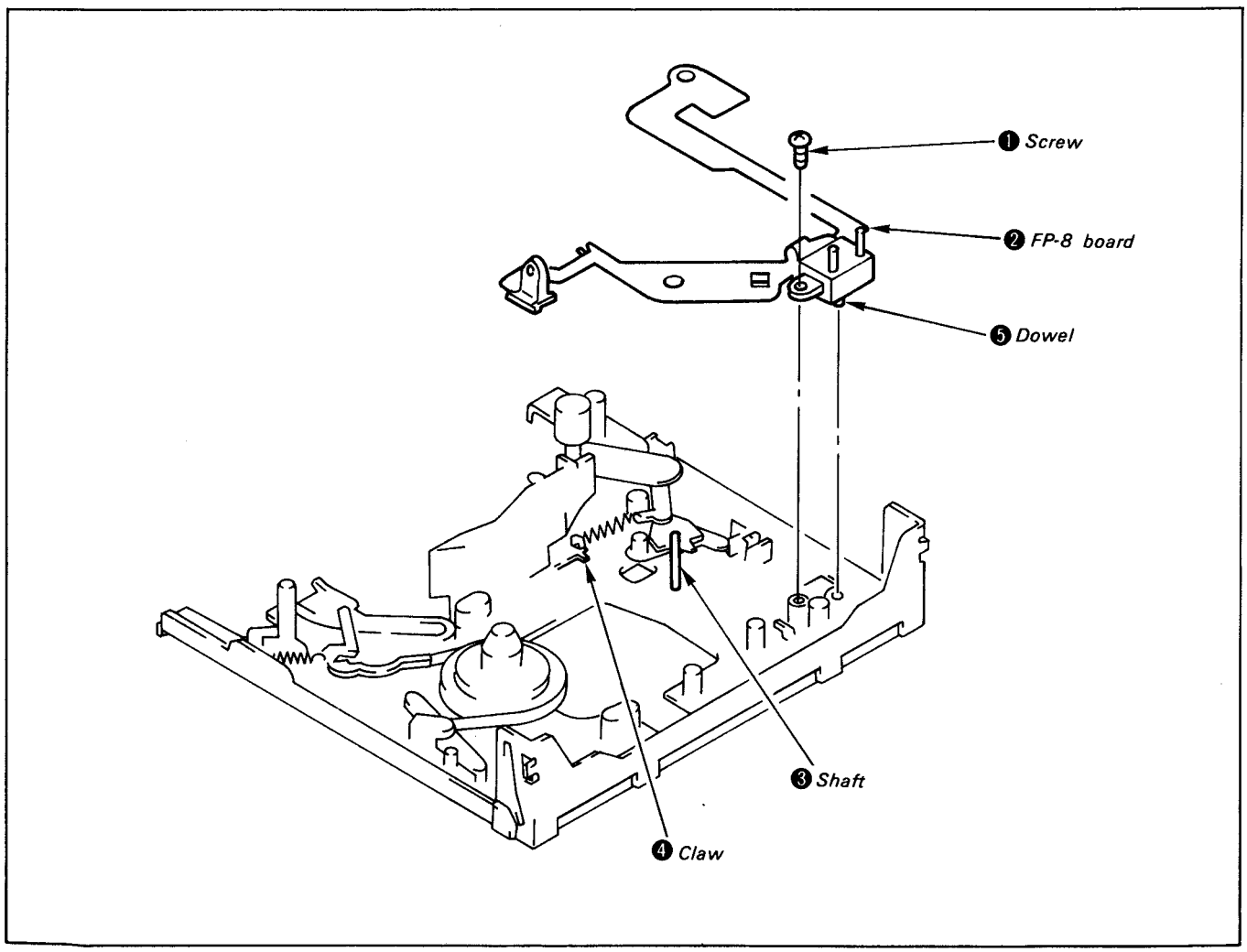

Fig. 2-32

2-3-20. Cassette Compartment Lock Assembly

1. Removal

1) By referring to 2-1-1 and 2-1-2, remove cassette arm assembly and LS cassette compartment assembly.
2) By referring to 2-3-10, remove LS chassis assembly.
3) Remove 2 screws ❶ and 3 screws ❷ and then, remove frame B assembly ❸.
4) Remove ES-11 board ❹.
5) Remove screw ❺ and remove CCD SW ❻.
6) Remove screw ❼ and screw ❽, and remove cassette compartment lock assembly ❾. (See Fig. 2-33)

2. Installation

1) Install CCD SW ❻ with screw ❺.
2) Match cassette compartment lock assembly ❾ to dowel ❿, and install.
3) Install screw ❼ loosely and then tighten screw ❽ and screw ❼ successively in this order.
4) Install ES-11 board ❹ to frame B assembly ❸.
5) Install frame B assembly ❸ with 2 screws ❶ and 3 screws ❷ successively in this order.
6) By referring to 2-3-10, install LS chassis assembly.
7) By referring to 2-1-1 and 2-1-2, install cassette arm assembly and LS cassette compartment assembly.

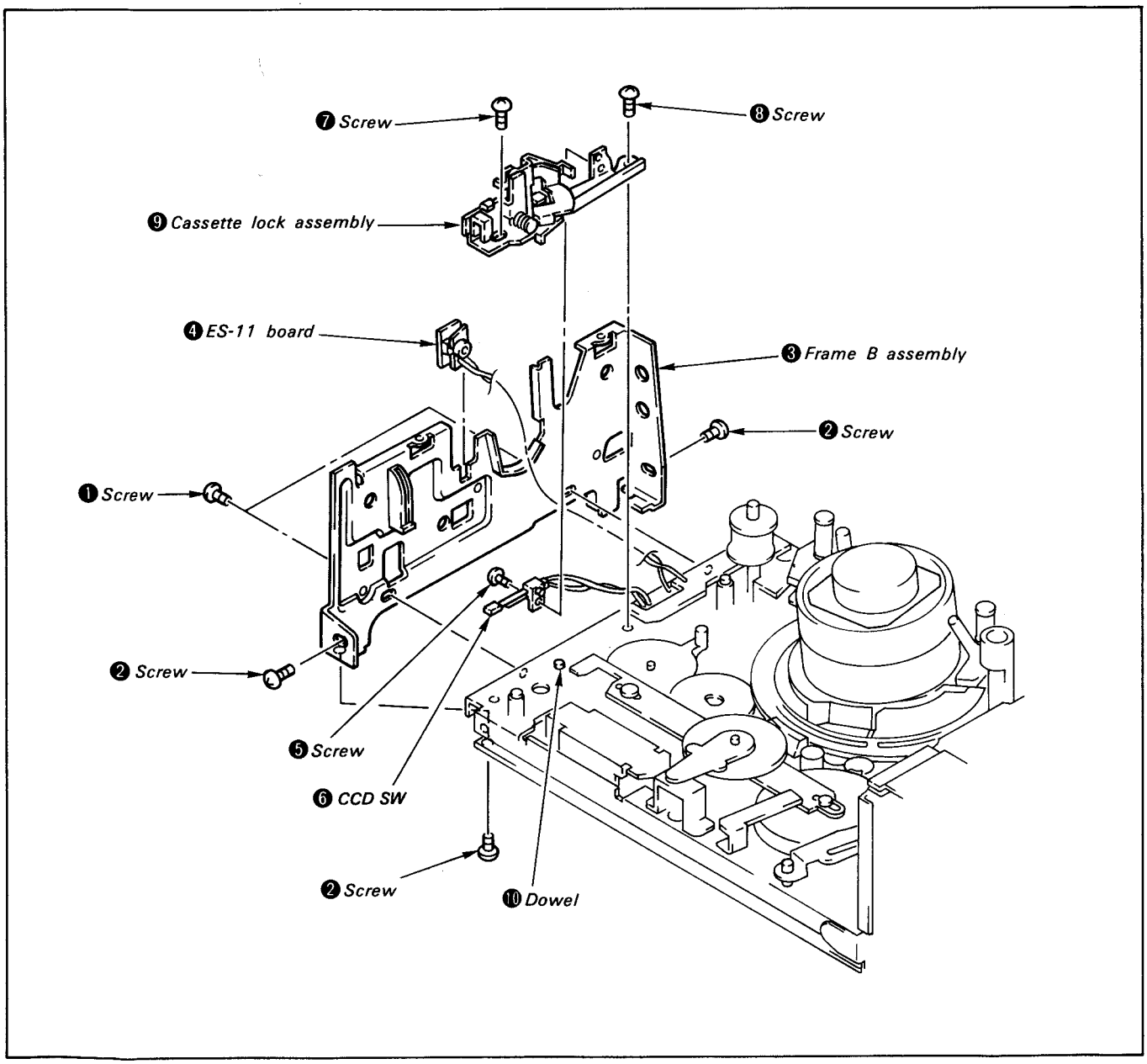

Fig. 2-33

2-3-21. LM Motor Assembly

1. Removal

1) By referring to 2-3-22, remove MD-10 board.
2) Remove screws ❶, ❷ and ❸, and remove the LM motor assembly (❹, ❺ and ❽).
3) Disassemble LM under cover assembly ❹ and DC motor ❽ which are attached by magnetic force.
4) Remove loading gear A ❺ from shaft ❼.
5) Melt the soldered 2 points shown in Fig.A and remove FP-14 flexible board ❻. (See Fig. 2-34)

2. Installation

1) Solder the 2 points shown in Fig.A and install FP-14 flexible board ❻.
2) Apply 1/3 drop of oil onto shaft ❼ and install loading gear A ❺.
3) Apply a size of one rice grain of SONY grease to worm gear ❾.
4) Install LM under cover assembly ❹ and DC motor ❽.
5) Install LM under cover assembly ❹ to pin ❿ of the mechanical chassis by matching the notch of it.
6) Install screws ❶, ❷ and ❸ loosely, and tighten screw ❶, ❷ and ❸ successively in this order.

Note:

Be sure to perform the soldering at 260°C within 5 seconds.

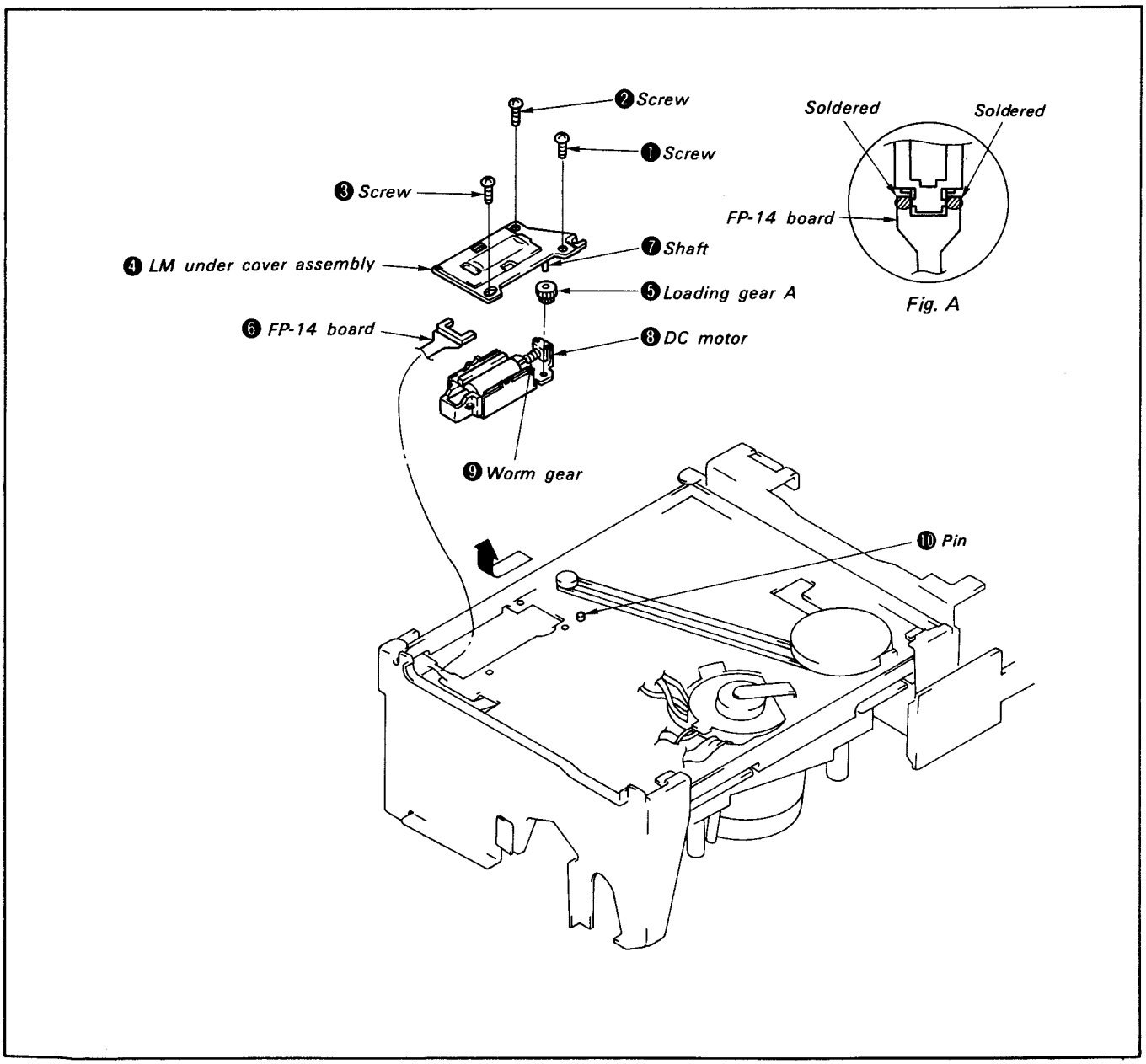

Fig. 2-34

2-3-22. MD-10 Board

1. Removal

1) Remove screws ❶, ❷ and ❸, and remove camera assembly ❹.
2) Turn the main body over and remove screw ❺, and then remove FP-16 board ❻.
3) Remove 2 screws ❼ and open MD-10 board ❽ in the direction of arrow.
4) Remove 4 connectors ❾ from MD-10 board ❽. (Fig. 2-35)

2. Installation

1) Install 4 connectors ❾ to MD-10 board ❽.
2) Install MD-10 board ❽ with 2 screws ❼ by inserting 2 fiber washers ❿ in between.
3) Install FP-16 board ❻ with screw ❺.
4) Install camera assembly ❹ with screws ❶, ❷ and ❸ by tightening them successively in this order.

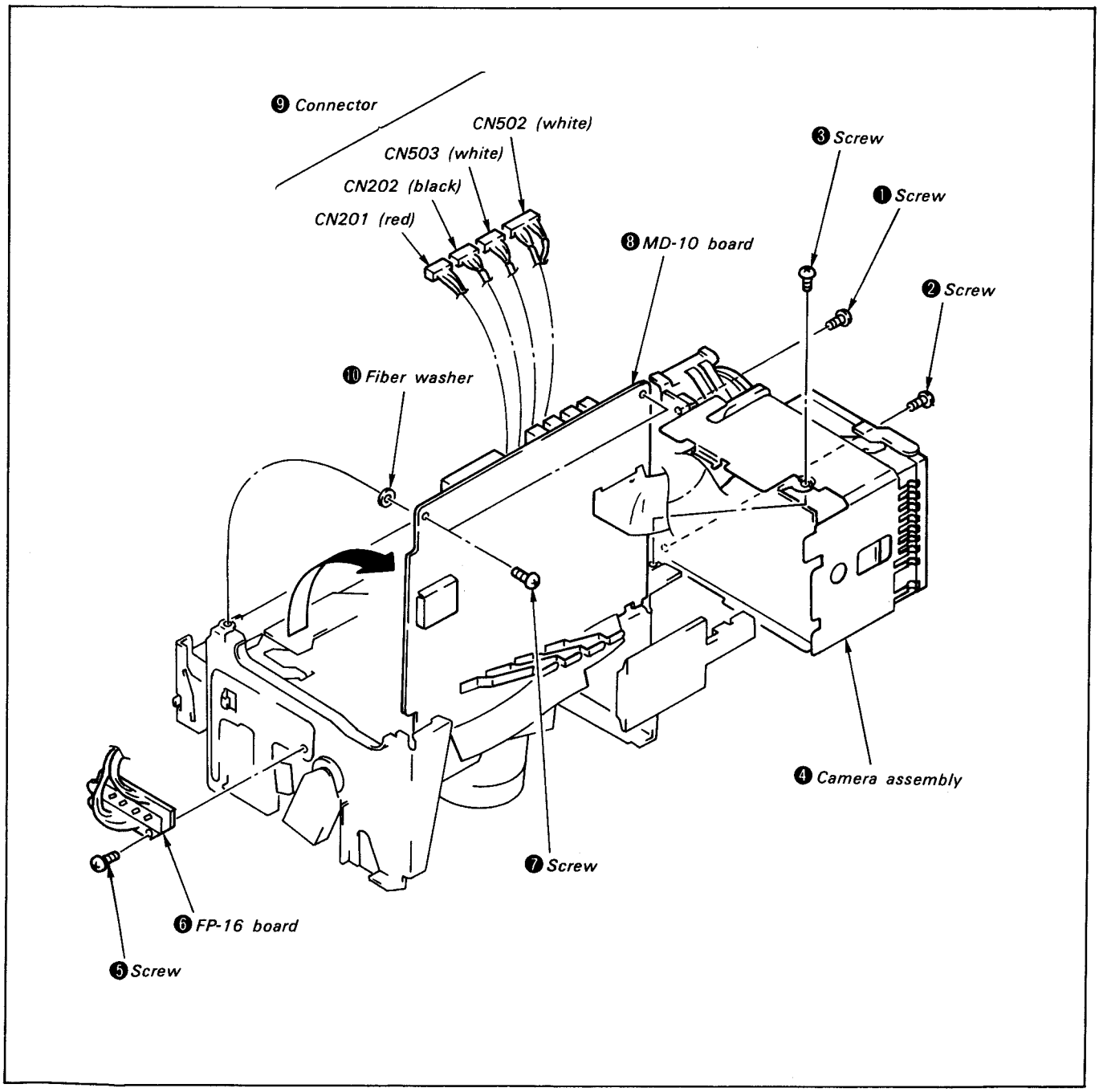

Fig. 2-35

2-3-23. Capstan Motor Assembly

1. Removal

1) Remove screws ❶ and ❷, and remove capstan motor assembly ❺.
2) Remove lock washer ❻ and conversion gear assembly ❼, and remove relay belt ❸. (See Fig. 2-36)

Note:

Do not touch the capstan motor shaft marked with * oil seal marked with * and rotor marked with *.

2. Installation

1) As shown in Fig.A, apply over 1/3 drop and below 1/2 drop of oil to the arrow marked point of shaft ❽.
2) Install conversion gear assembly ❼ to shaft ❽ while applying relay belt ❸ to the assembly.
3) Install lock washer ❻.
4) Install capstan motor assembly ❺ to mechanical chassis while applying relay belt ❸ to pulley ❹.
5) Be sure to confirm that the capstan motor and mechanical chassis become horizontal, and install them with screws ❶ and ❷ successively in that order.

Notes:

1) **Be sure to confirm that lock washer ❻ is being set completely into the groove of shaft ❽.**
2) **Care should be taken so as not to leave the relay belt ❸ in the stretched state.**

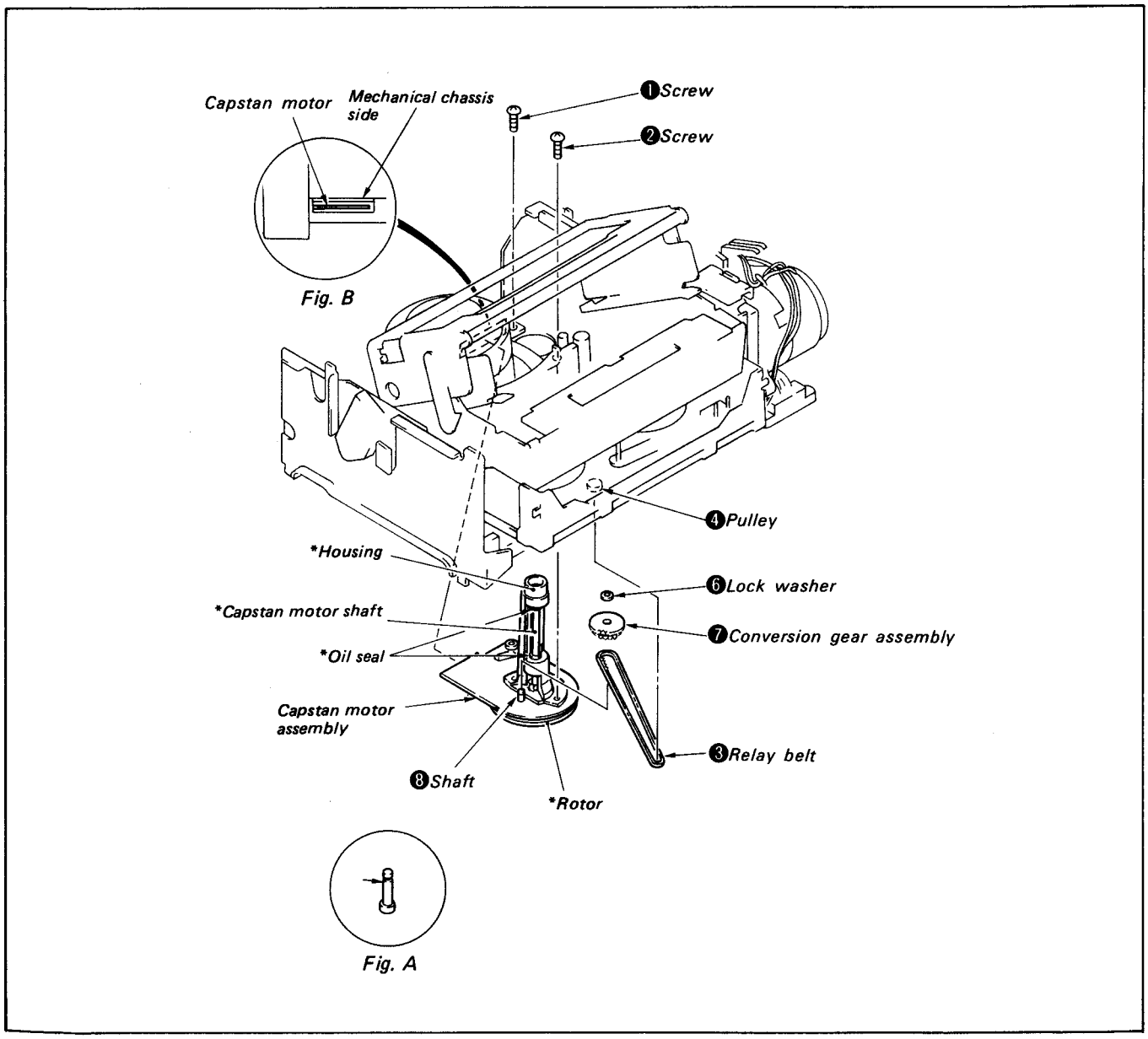

Fig. 2-36

2-3-24. TG-2

1. Removal

1) Remove TG-2 nut ❶.
2) Remove upper flange receptacle ❷, TG-2 flange ❸, TG-2 roller ❹, TG-2 sleeve ❺, TG-2 flange ❻, TG-2 lower flange receptacle ❼ and pressure coil spring ❽. (See Fig. 2-37)

Notes:

1) When removing TG-2 nut ❶, taken precautions not to scatter the parts which are being pressed by the pressure coil spring ❽.

2) Be sure to use gloves when installing and removing TG-2 flange ❸ and TG-2 roller ❹.

2. Installation

1) Install pressure coil spring ❽, TG-2 lower flange receptacle ❼, TG-2 lower flange ❻, TG-2 sleeve ❺, TG-2 roller ❹, TG-2 flange ❸ and upper flange receptacle ❷.
2) Install TG-2 nut ❶.
3) Perform TG-2 height preset.

Note:

Be sure to install TG-2 roller upper and lower sides correctly while observing Fig. A.

3. TG-2 height preset

1) Push up upper flange receptacle ❾ in the direction of arrow as shown in Fig. A.
2) Screw TG-2 nut ❿ into TG-2 shaft ⓫ until its height becomes the same level of the upper surface of TG-2 shaft ⓫.
3) Rotate TG-2 nut ❿ two times in the direction of arrow as shown in Fig. B. At this point, be sure to confirm that the TG-2 nut becomes 0.4mm higher than the TG-2 shaft.

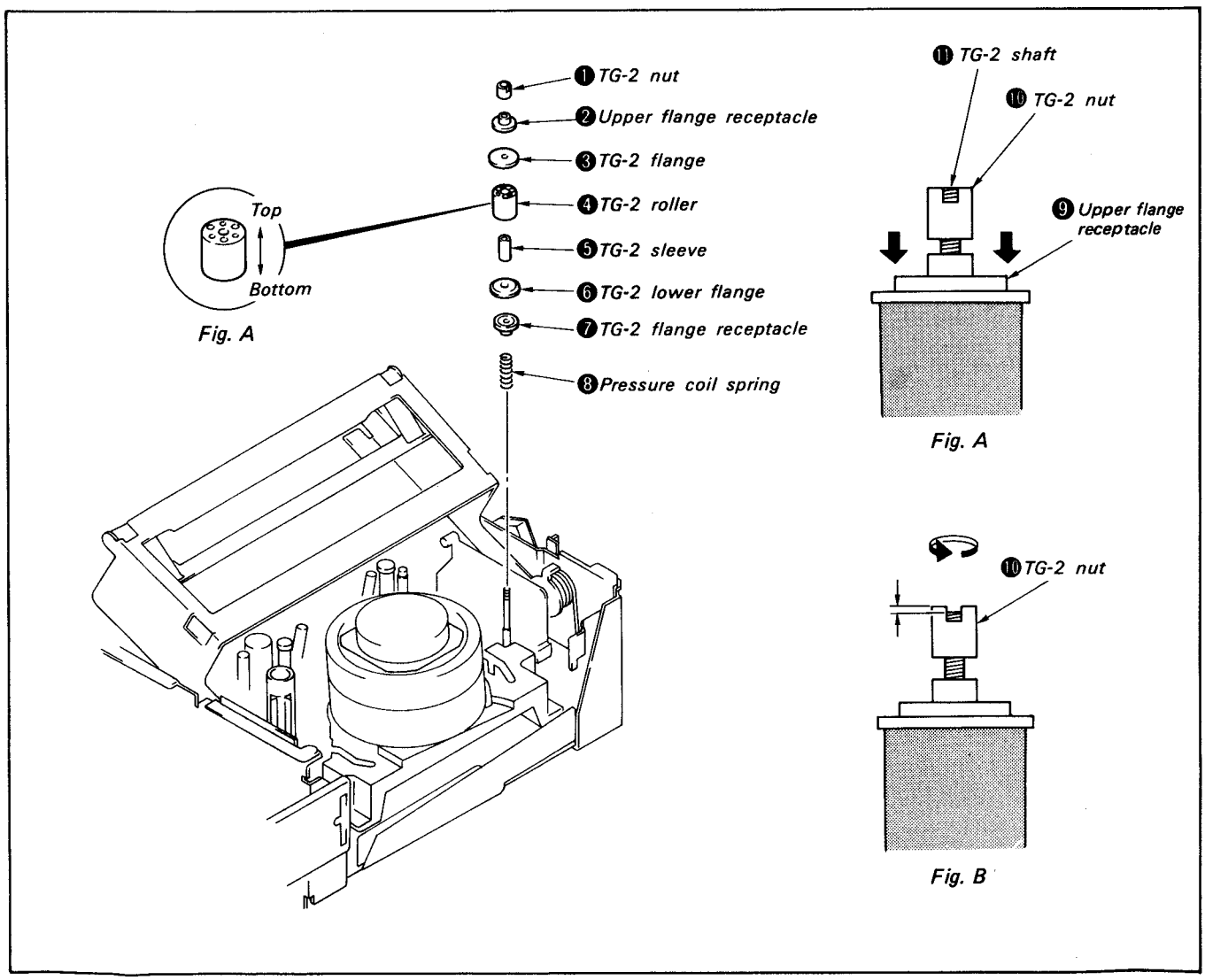

Fig. 2-37

2-3-25. Drum Assembly

1. Removal

1) Turn into EJECT mode.
2) By referring to 2-3-22, open MD-10 board and remove 4 connectors ❶.
3) Remove 2 screws ❷ and a screw ❸, and remove drum base ❹ and dew condensation sensor ❺.
4) Remove 3 screws ❻ and 3 washers ❼, and remove drum assembly ❽. (See Fig. 2-38)

2. Installation

1) Install drum assembly ❽ to drum base ❹ and set 3 screws ❻ and 3 washers ❼.
2) Mount drum base ❹ on the mechanical chassis and secure it with 2 screws ❷.
3) Tighten dew condensation sensor ❺ and drum base ❹ together with screw ❸.
4) Apply molten grease to the arrow marked point, as shown in Fig. A.
5) Install 4 connectors ❶ to MD-10 board.
6) By referring to 2-3-22, install MD-10 board.
7) Perform tape path adjustment in item 2-4.

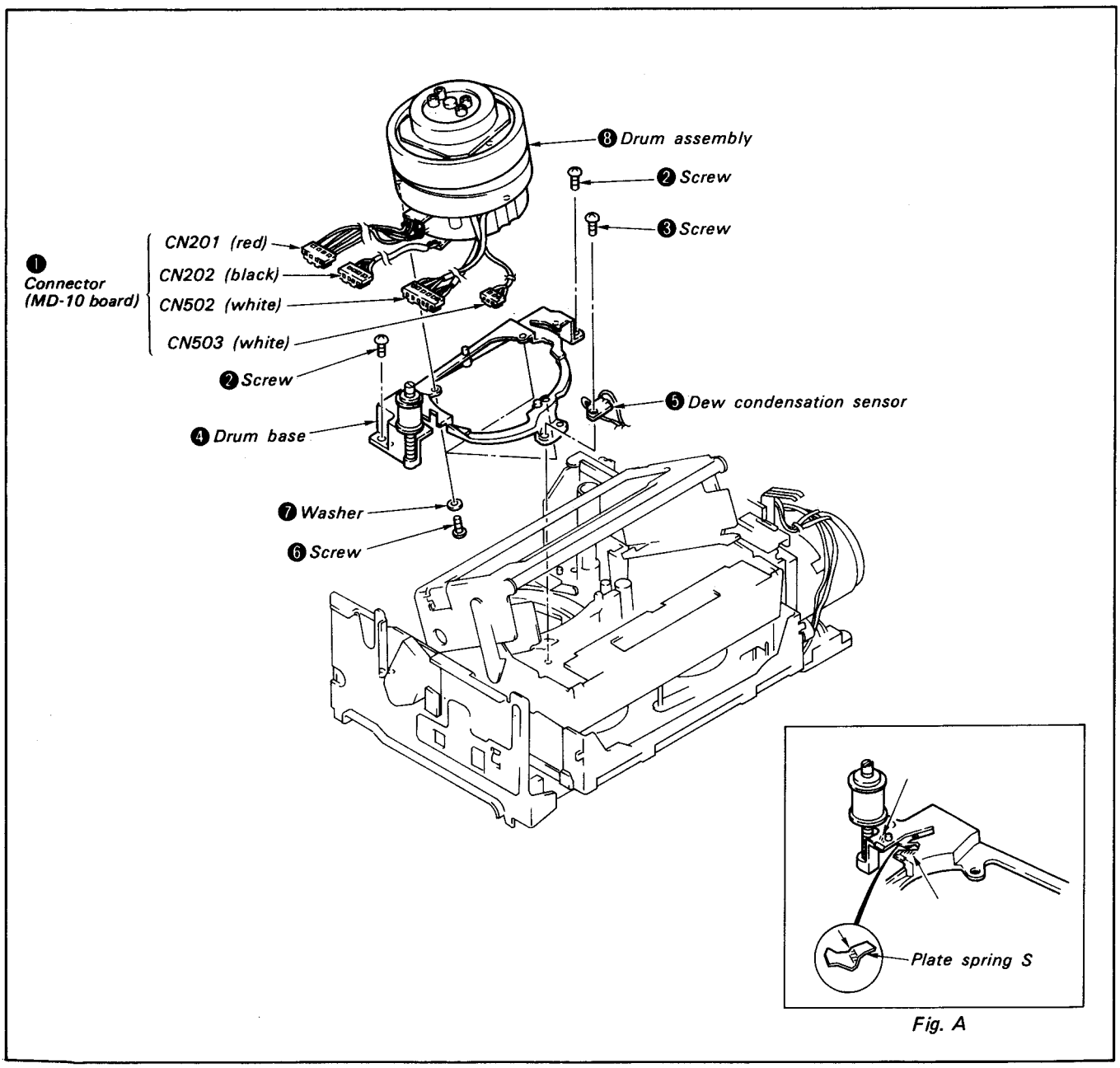

Fig. A

Fig. 2-38

2-3-26. Replacement of Rotary Upper Drum

1. Removal

- Replacement of the rotary upper drum is carried out in accordance with the color mark shown in Fig. A.
- If video recording is possible, make video recording prior to the removal.

Combination of color marks when performing replacement

New rotary upper drum		Removed rotary upper drum
Part No.	Color mark	Color mark
A-7049-050-A	Black or green	Black or green
A-7049-051-A	Blue or red	Blue or red

1) Remove 2 hexagonal socket head cap screws ❶ and damper ❷.
2) Remove all the six points of soldering in ⓐ section, and confirm that the board and pins which are projected from the lower side of the board can be moved freely by touching with tweezers, etc.
3) Remove 2 hexagonal socket head cap screws ❶. (See Fig. 2-39)
4) Set jig 6 (Ref.No.J-10) into the screw hole, where damper ❷ had been installed, with attached 2 screws ❹ and set the attached hexagonal socket head cap screw ❺ to jig ❻. Then, remove rotary upper drum ❼ by using the jig. (See Fig. 2-40)

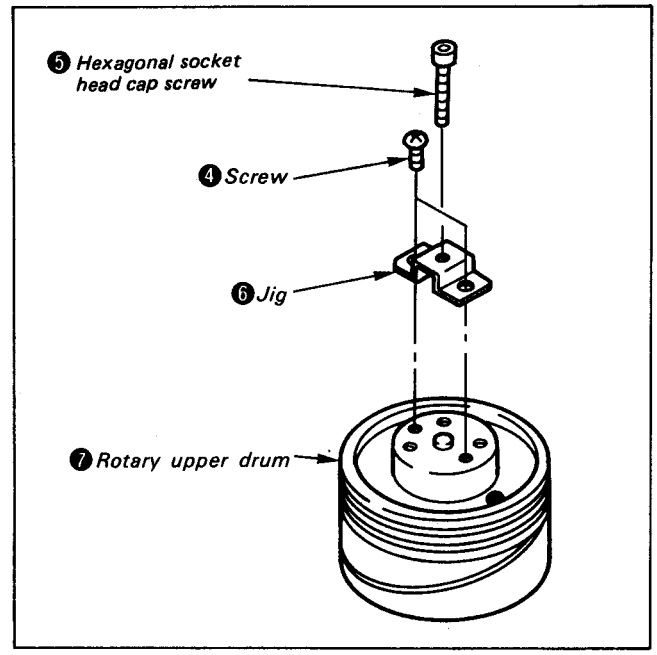

Fig. 2-40

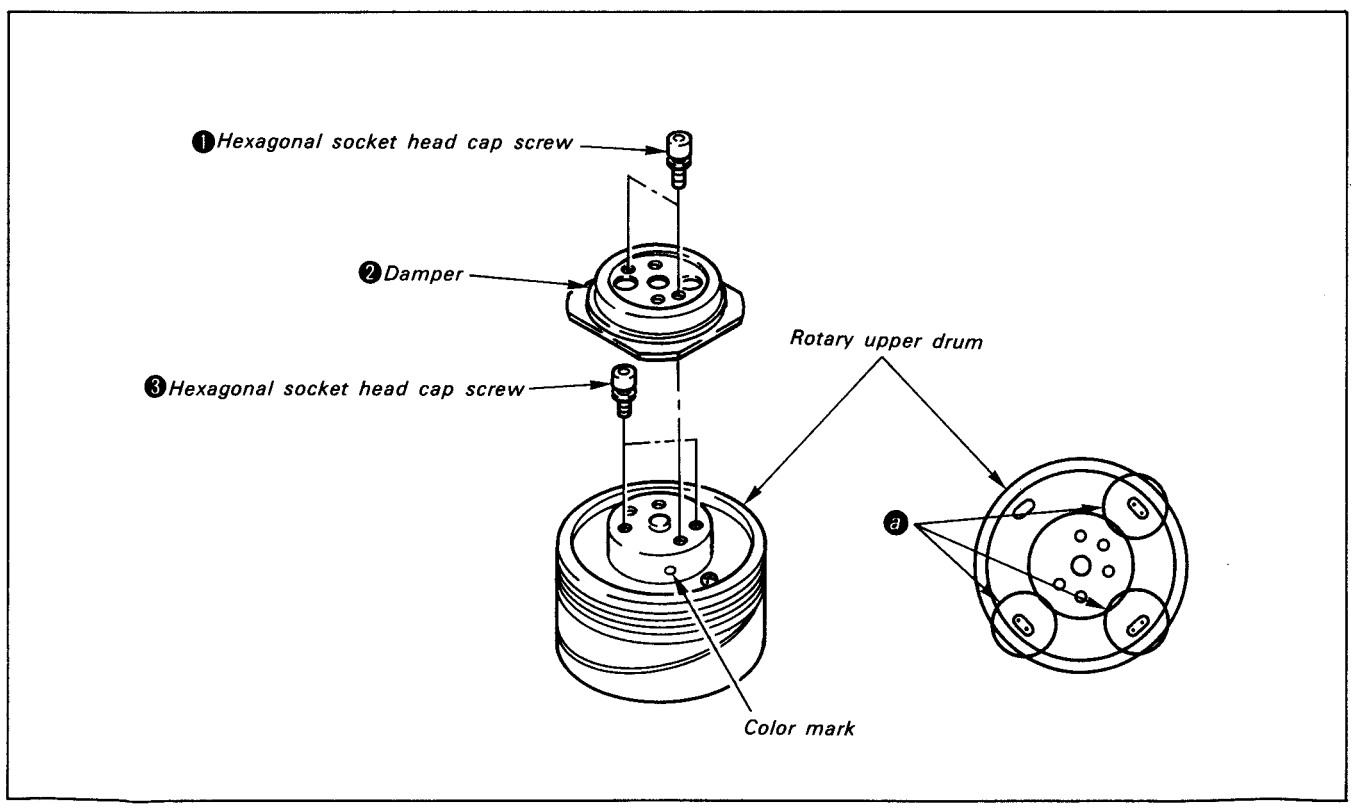

Fig. 2-39

2. Installation

1) Perform cleaning of flange surface and rotary upper drum surface which are contacted to it, and confirm that there are no dust and flaws.
2) Insert the rotary upper drum slightly into the shaft while adjusting by using jig ❾ (Ref.No.J-10) so that the position of rotary upper drum ❼ and position determining hole ❽ coincide. (See Fig.2-41) At this point, be sure to confirm that pin ❿ is protruded from the hole of the rotary board.
3) Remove jig ❾ from upper rotary drum and push it gently into lower one manualy. (See Fig. 2-42) However, when it cannot be inserted thoroughly, tighten 2 hexagonal socket head cap screws ❸ alternately to secure it temporarily.
4) Insert jig ❾ again into position determining hole ❽, and be sure to confirm that it can be inserted smoothly. When it cannot be inserted, loosen 2 hexagonal socket head cap screws ❸, and insert a wrist watch driver, etc. into it to shift it.
5) Tighten 2 hexagonal socket head cap screws ❸.
6) Solder pin ❿ of a section.

   Note:

   At this point, be sure not to let the soldering flow underneath the board.
7) Install damper ❷ with 2 hexagonal socket head cap screws ❶.

   Notes:

   1) Be sure not to tighten too strongly.

   2) When performing installation, special care should be taken so as not to mistake the hexagonal socket head cap screws ❸ (2 x 5) with that of ❶ (2 x 2.7).

   3) Be sure to perform tape path adjustment after installation.

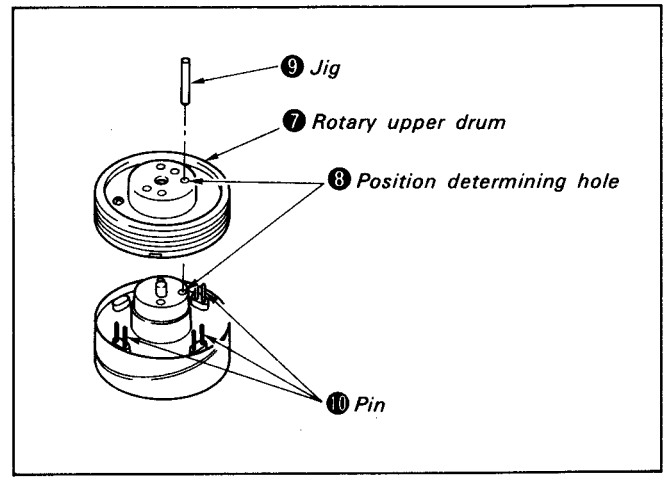

Fig. 2-41

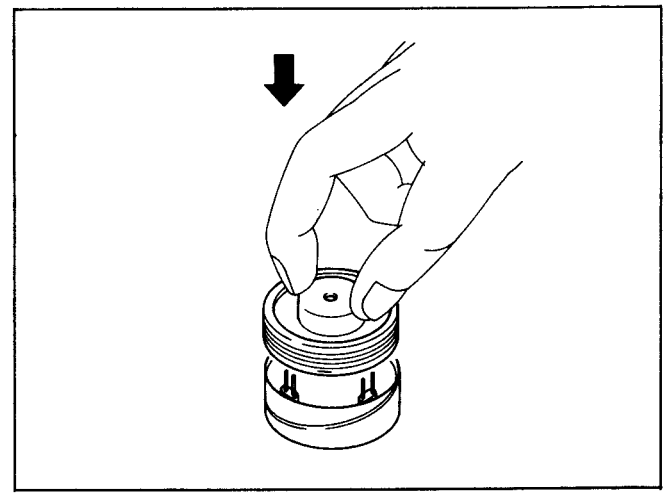

Fig. 2-42

2-3-27. Reel Table Height Check

1. Removal

1) By referring to 2-1-1, remove cassette arm assembly and LS cassette compartment assembly.
2) By referring to 2-3-1, remove reel lock lever.
3) By referring to 2-3-2, remove pendulum stopper plate.

2. Checking

1) Confirm by using calipers, etc., so that the heights from LS chassis ❶ to S reel table reel receptacle plate surface ❷ and from LS chassis to T reel table reel receptacle plate surface ❸ should respectively be 6.85±0.15 mm.

Note:

However, in the case a washer (t = 0.13) is inserted under the T reel table, it becomes 6.98±0.15 mm. (See Fig. 2-43)

3. Installation

1) By referring to 2-3-2, install pendulum stopper plate.
2) By referring to 2-3-1, install reel lock lever assembly.
3) By referring to 2-1-1 and 2-1-2, install cassette arm assembly and LS cassette compartment assembly.

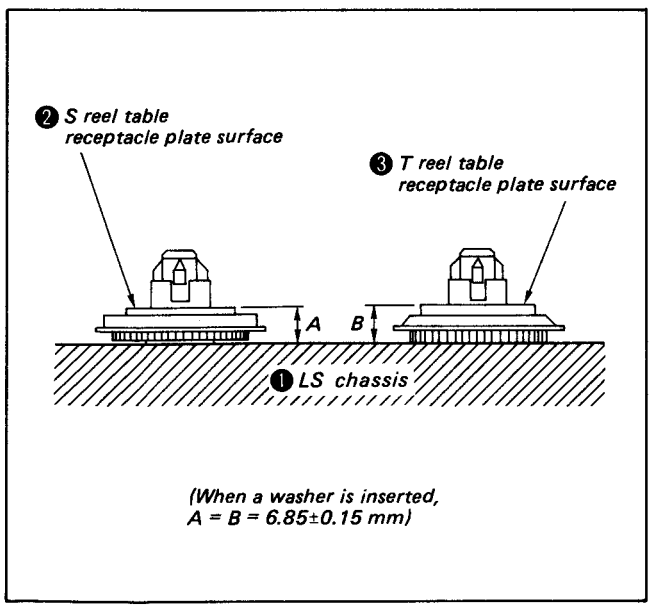

Fig. 2-43

2-3-28. Pinch Stroke Adjustment

1. Removal

1) By referring to 2-1-1 and 2-1-2, remove cassette arm assembly and LS cassette compartment assembly.
2) By referring to 2-3-1, remove reel lock lever assembly.
3) By referring to 2-3-2, remove pendulum stopper plate. (See Fig. 2-44)

2. Adjustment

1) Turn into [REC] mode.
2) Loosen 2 screws of pinch arm B assembly ❶, and move it in the direction of arrow by inserting a flat-blade screwdriver, etc. into notching ❷.
3) Adjust so that the clearance of Ⓐ section becomes 0.3 mm to 0.5 mm and tighten 2 screws of pinch arm B assembly ❶.
4) Turn into [READY] mode.
5) Be sure that there is a clearance between pinch roller 3 and capstan shaft ❹ when it is turned into [READY] mode.

3. Installation

1) By referring to 2-3-2, install pendulum stopper plate.
2) By referring to 2-3-1, install reel lock lever assembly.
3) By referring to 2-1-1 and 2-1-2, install cassette arm assembly and LS cassette compartment assembly.

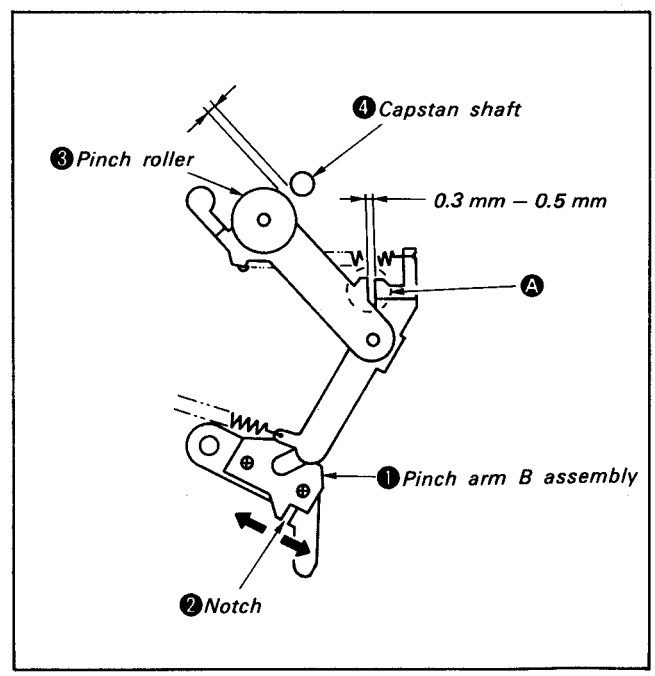

Fig. 2-44

2-3-29. Soft Brake Torque Check

1. Removal

1) By referring to 2-1-1 and 2-1-2, remove cassette arm assembly and LS cassette compartment assembly.

2. Checking

1) Turn into [USE (STOP)] mode.
2) Mount the tension measuring exclusive reel (Ref.No.J-8) on the S reel table.
3) Pull the dial tension gauge (Ref.No.J-6) in the direction of arrow and confirm that the gauge indicates the specified value.

3. Installation

1) By referring to 2-1-1 and 2-1-2, install cassette arm assembly and LS cassette compartment assembly.

2-3-30. FWD/RVS Torque Check

1) Set the FWD and RVS take up torque cassette (Ref.No. J-9).
2) Turn into [REC] mode, and confirm torque value at the T reel side becomes 12 gcm to 20 gcm.
3) Ground pin 5 (base of Q216) of IC101 on MD-10 board. (In this state, it becomes into [RVS] mode when the REC SW is turned ON.)
4) In the state mentioned in 3), confirm that the torque at S reel becomes 9 gcm to 21 gcm by turning into REC mode.
5) In the event the above-mentioned value are not indicated, be sure to replace the individual reel tables.

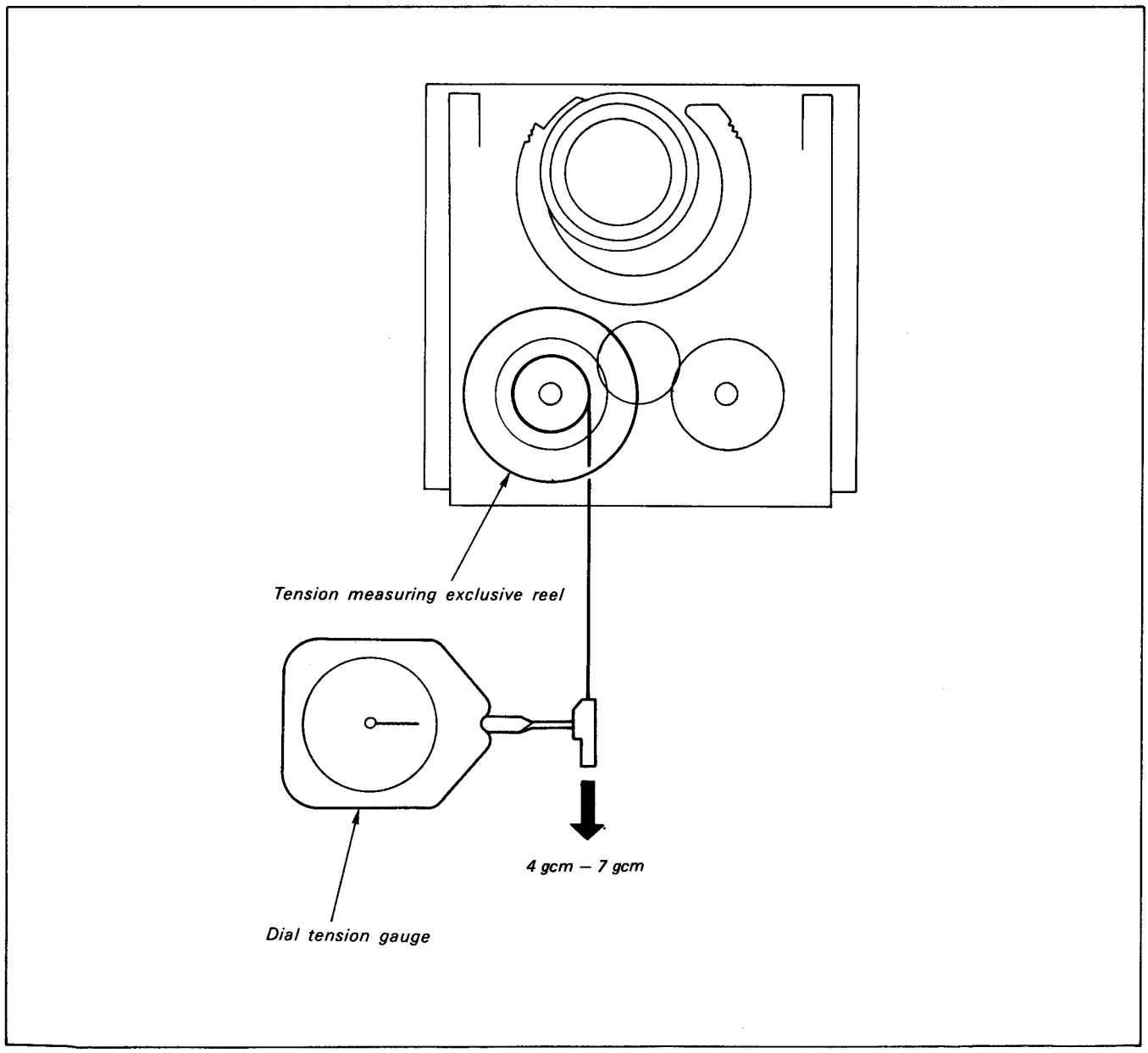

Fig. 2-45

2-3-31. Tension Regulator Position Adjustment

1. Removal

1) By referring to 2-1-1 and 2-1-2, remove cassette arm assembly and LS cassette compartment assembly.

2. Adjustment

1) Turn into REC mode and set a cassette tape and run the tape. (See Fig. 2-1-4)
2) In tape running state, confirm whether the arrow marked Ⓐ point is positioned at the point (arrow mark Ⓑ) 1/3 within the thickness of LS guide ❷ or not. (See Fig. 2-46)
3) When it is not at the specified position, remove the cassette and perform the adjustments described in after step 4).
4) Loosen screw ❸.
5) If TG-1 arm assembly ❶ is within the inner side than the specified position, shift the tension regulating band plate ❹ slightly in the direction of arrow Ⓒ. If it is in the outer side, shift it slightly in the direction of arrow Ⓓ and secure it with screw ❸. (See Fig. 2-47)

Notes:

1) Use a cassette tape which has been forwarded to about the middle section.

2) When performing step 2), the cassette tape should be removed in advance.

3. Installation

By referring to 2-1-1 and 2-1-2, install cassette arm assembly and LS cassette compartment assembly.

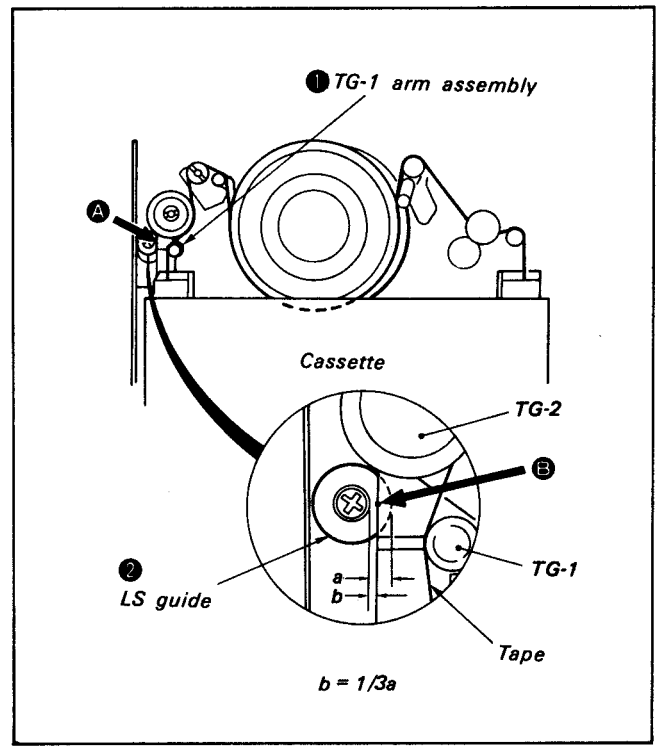

Fig. 2-46

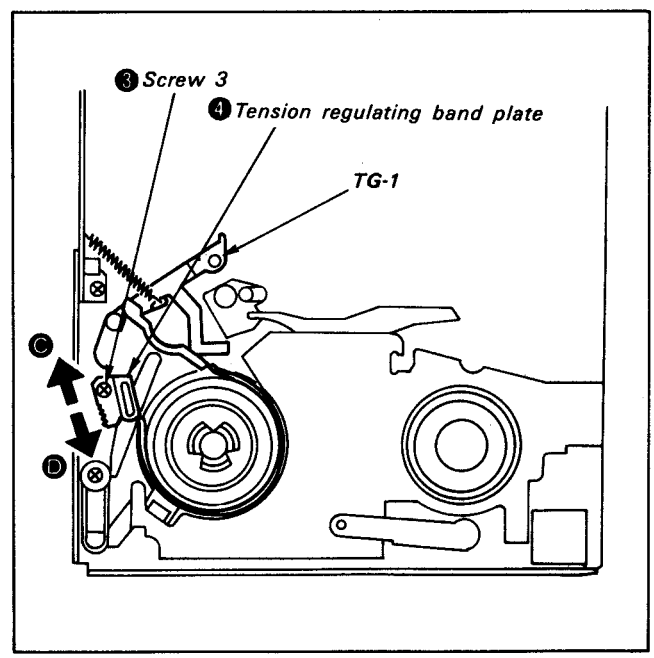

Fig. 2-47

2-3-32. FWD Back Tension Adjustment

1. Removal

By referring to 2-1-1 and 2-1-2, remove cassette arm asssembly.

2. Adjustment

1) Turn into [REC] mode.
2) Set the tension measuring exclusive reel (Ref.No.J-7).
3) Measure tape tension of the outgoing side by using dial tension gauge (Ref.No.J-6). At this point, the measurement should be conducted by pulling the tape at the speed of 14 mm/sec. (See Fig. 2-48)
4) Move spring hooking position ❹ of tension regulating spring ❸ so that the tension applied becomes within the range of 7.9 to 8.9g. (See Fig. 2-49)

3. Installation

1) By referring to 2-1-1 and 2-1-2, install cassette arm assembly and LS cassette compartment assembly.

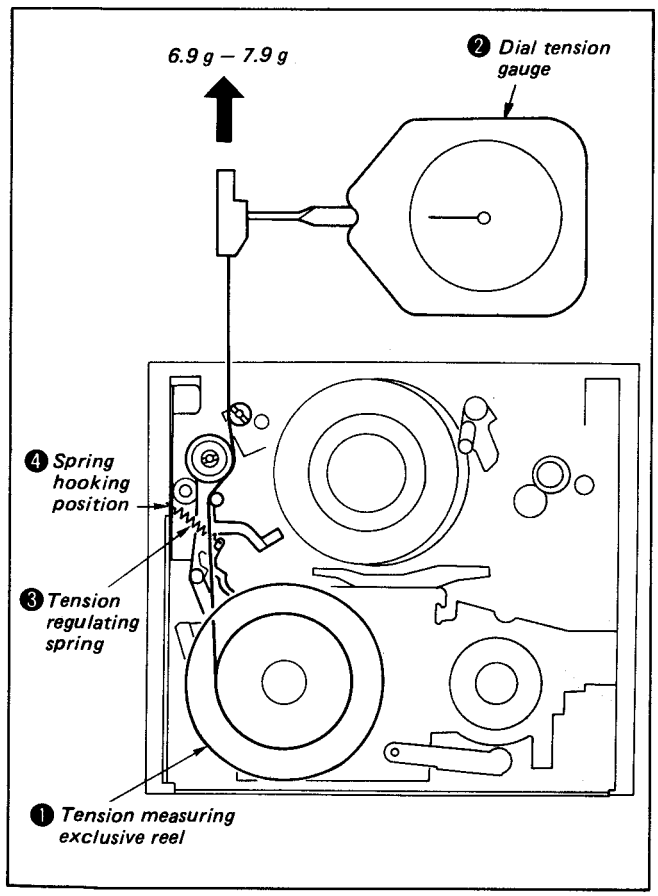

Fig. 2-48

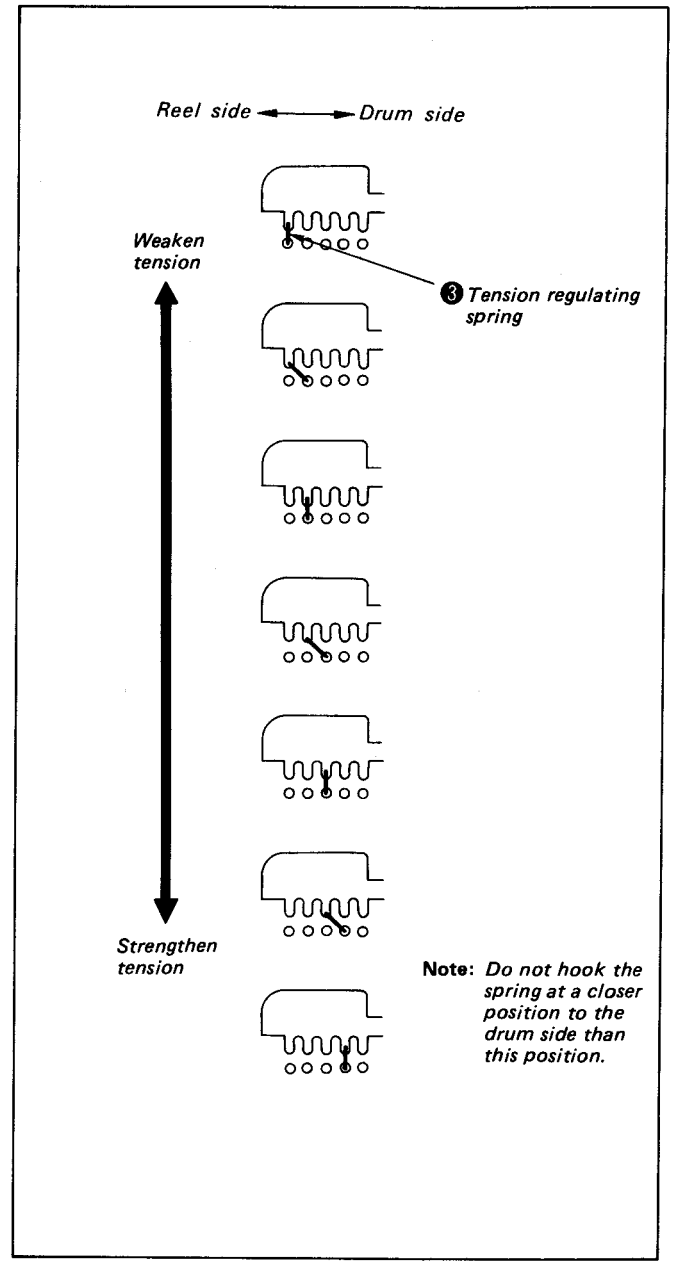

Fig. 2-49

2-4. TAPE PATH ADJUSTMENT

- Perform this adjustment after comfirming that the electrical adjustment has been completed.

2-4-1. Preparations for Adjustment

1) Perform cleaning of the tape running surface (tape guide, drums, capstan shafts and pinch rollers).
2) Camera section adjustment
   Connect track shift and monitor jig and set the jig switch as shown below, by refering to Connection Diagram 1), 1-3, Track Shift and Monitor Jig.
   SEL switch: ON
   PATTERN switch: V8
   VTR/CMR switch: VTR
   2.4 K/Hi switch: Hi
   AFT ADJ switch: OFF
3) Oscilloscope connection
   1 CH: M8 PB Y terminal of track shift and monitor jig (RF output).
   2 CH: RF SW P terminal of track shift and monitor jig (Exterior trigger).
4) Play back the alignmnet tape for tracking (WR5-1C) in accordance with the following (See Fig. 2-50).
   S102 (SP/LP): SP mode
   Note:
   Erroneous erase preventive claw of the tape should be in the recordable position.
   i) Short-circuit LENS DOOR SW (S901) using a clip.
   ii) Short-circuit MD-10 board check land E to GND.
   iii) Instantaneously short-circuit MD-10 board REC SW spring to GND.
   Note:
   Tape is running but becomes standby mode, with the standby LED lit.
   iv) Short-circuit again REC SW contact spring to GND instantaneously so that the playback mode is attained.
   Notes:
   1) Standby LED goes off and playback mode is restored.
   2) • **Each short-circuit between REC SW contact spring and GND alternately set the playback mode and standby mode. In order to stop it, open LENS DOOR SW (S901).**
   • **Signals which are output from VIDEO OUT of track shift and monitor jig are image signals from the camera and the playback signals from the tape are not output.**
5) Maximize the RF waveform amplitude by turning the track shift knob of the track shift and monitor jig (See Fig. 2-51).

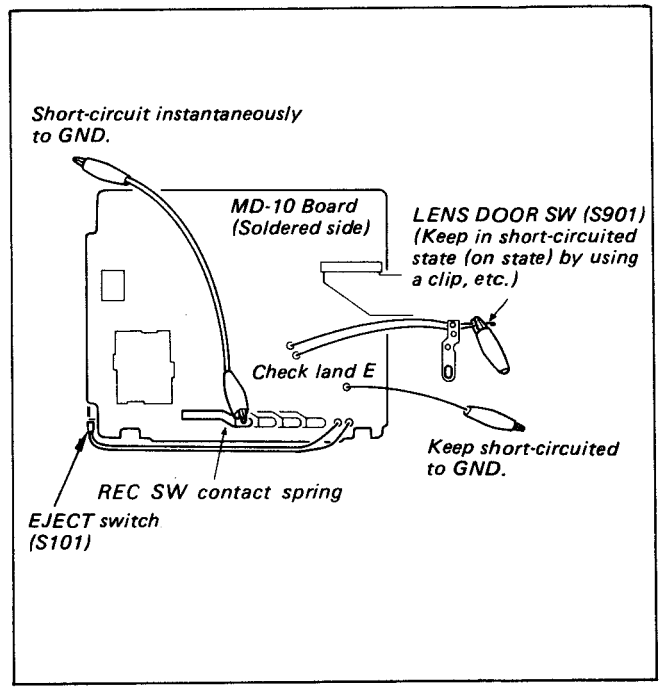

Fig. 2-50

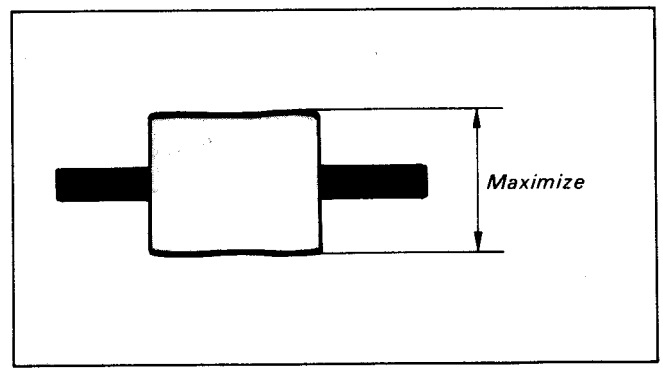

Fig. 2-51

6) Confirm that the oscilloscope RF waveforms are flat both on the inlet side and on the outlet side (See Fig. 2-52 a). If they are not flat, perform the adjustment in accordance with the following :

- If RF waveform is not flat on the inlet side (See Fig. 2-52 b).
  After a rough adjustment in accordance with 2-4-2 Tracking Adjustment, perform adjustment in accordance with 2-4-3 Adjustment on the Inlet Side.
- If RF waveform is not flat on the outlet side (See Fig. 2-5 c).
  After a rough adjustment in accordance with 2-4-2 Tracking Adjustemnt, perform adjustment in accordance with 2-4-4 Adjustment on the Outlet Side.

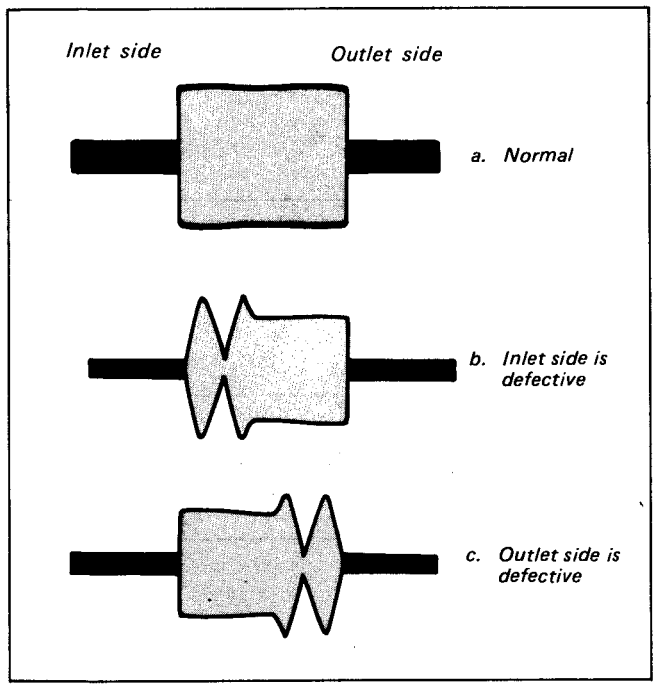

Fig. 2-52

7) If RF waveform is normal, check after the adjustment has been performed in accordance with 2-4-5 Check after Adjustment.

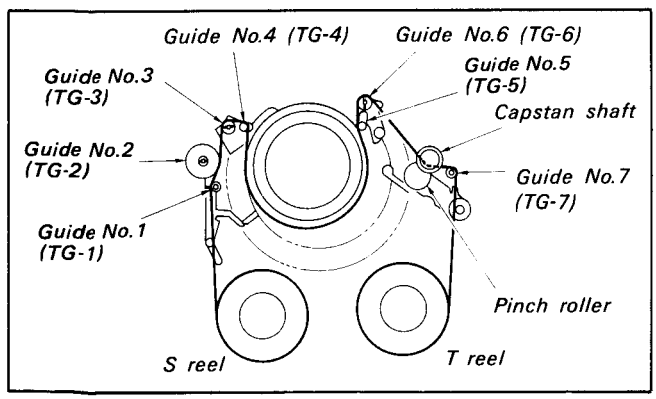

Fig. 2-53 Tape guide arrangement diagram

2-4-2. Rough Adjustment of Tracking

1) Play back the tracking alignment tape.
2) Maximize the RF waveform amplitude by turning the track shift knob of track shift and monitor jig (See Fig. 2-51).
3) Loosen lock screw ❶ of guide No. 3 (TG-3) and turn guide No.3 so that the waveform on the inlet side becomes flat (See Fig. 2-54).
4) If the waveform fails to become flat after the adjustment 2). turn guide No.2 (TG-2) approx. 180° counterclockwise and operate guide No.3 so that the waveform becomes flat.
5) Loosen lock screw ❷ of guide No.6 (TG-6) and turn Guide No.6 so that the waveform on the outlet side becomes flat (See Fig. 2-55).
6) In case of performing an adjustment on the inlet side after the above-mentioned adjustment, tihgten lock screw of guide No.6. In case of performing an adjustment on the outlet side after the above-mentioned adjustment, tighten the lock screw of guide No.3. Confirm that waveforms do not have variations on the outlet side when the lock screw of guide No.6 is tightened and on the inlet side when the lock screw of guide No.3 is tightened.

Note:
When tightening the lock screw of guide No.6 the lock screw should be turned with the base lightly depressed downward so that the top of the guide No.5 (TG-5) does not come into contact with the drum.

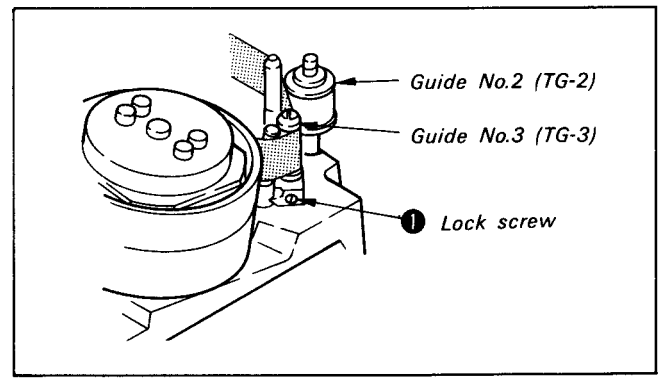

Fig. 2-54

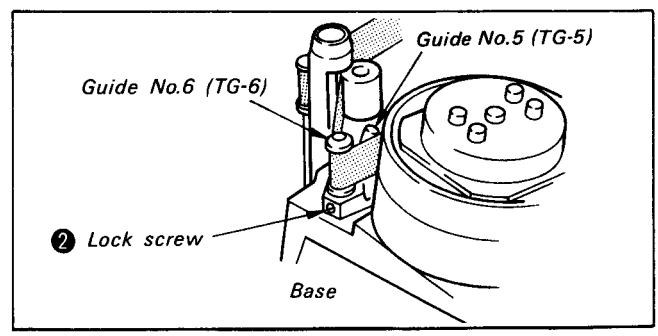

Fig. 2-55

2-4-3. Adjustment on the Inlet Side

1) Play back the tracking alignment tape. Bring the RF waveform amplitude to 2/3 of the maximum level by turning the track shift knob of the track shift and monitor jig (See Fig. 2-56).
2) Turn guide No.3 (TG-3) counterclockwise until the waveform on the inlet side becomes one or 0.5–1 ridges (See Fig. 2-57).
3) Confirm that the waveform on the inlet side is free from variations for five seconds, the tape is controlled by the upper flange of guide No.3, while the lower flange lifts up, and the tape is controlled by the lower flange of guide No.2 (See Fig. 2-58).
   If the above-mentioned conditions are not satisfied, turn guide No.2 (TG-2) counterclockwise so that the waveform on the inlet side becomes 1–1.5 ridges (See Fig. 2-59).
   Confirm that the tape is free-running (without the upper and lower flanges coming into contact with the tape) at guide No.3.
4) Turn guide No.3 clockwise so that the waveform on the inlet side becomes that.
5) Tighten the lock screw of guide No.3 and lock guide No.3. Confirm that the waveform on the inlet side has no variations.

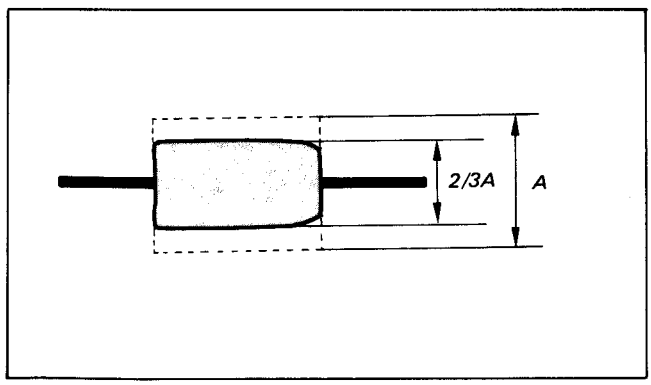

Fig. 2-56

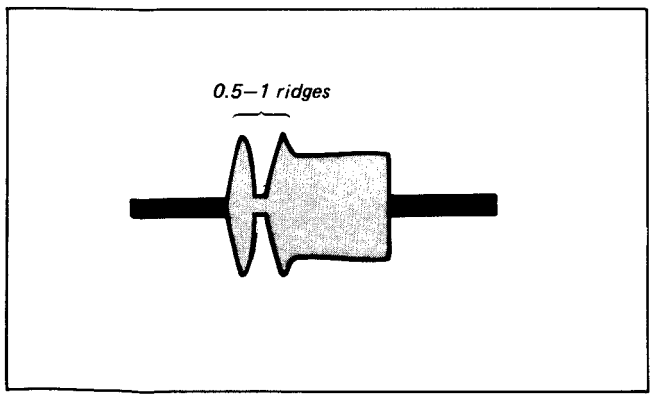

Fig. 2-57

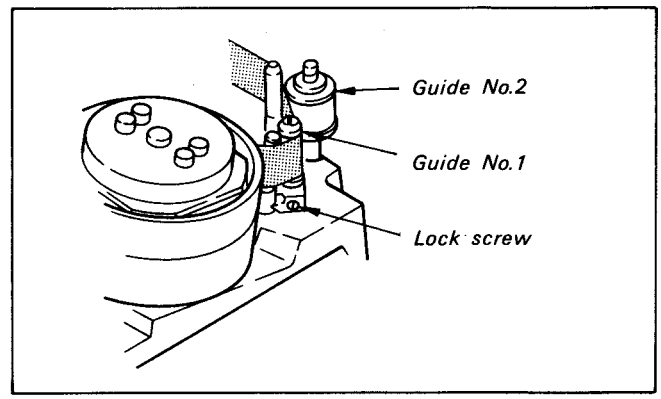

Fig. 2-58

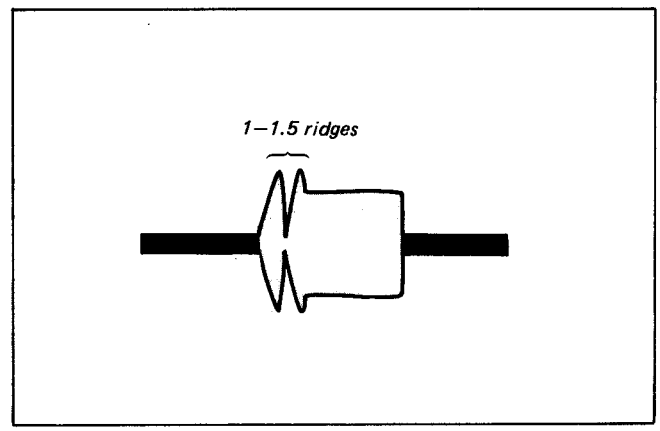

Fig. 2-59

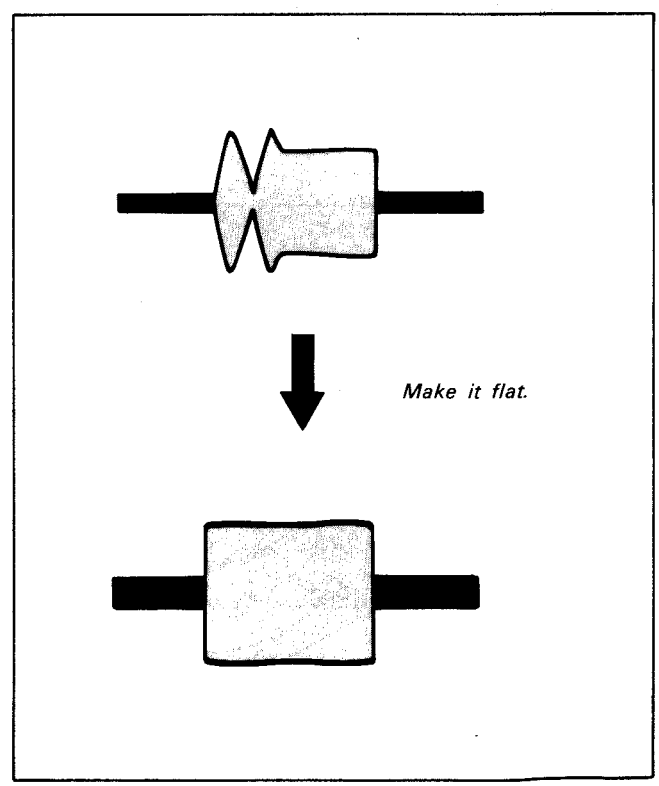

Fig. 2-60

2-4-4. Adjustment on the Outlet Side

1) Play back the tracking alignment tape. Bring the RF waveform amplitude to 2/3 of the maximum level by turning the track shift knob of the track shift and monitor jig (See Fig. 2-56).
2) Turn guide No.6 (TG-6) counterclockwise until the waveform on the outlet side becomes one or 0.5–1 ridges (See Fig. 2-61).
3) Confirm that the waveform on the inlet side is free from variations for five seconds and that the tape is controlled by the upper flange of guide No.3 while the lower flange lifts up (See Fig. 2-62).
4) Turn guide No.6 clockwise so that the waveform on the outlet side becomes flat (See Fig. 2-63).
5) Tighten the lock screw of guide No.6 and lock guide No.6. Confirm that the waveform on the outlet side has no variations.

Note:

When tightening the lock screw of guide No.6, turn the lock screw with the base lightly depressed downward so that the top of guide No.5 (TG-5) does not come into contact with the drum (See Fig. 2-62).

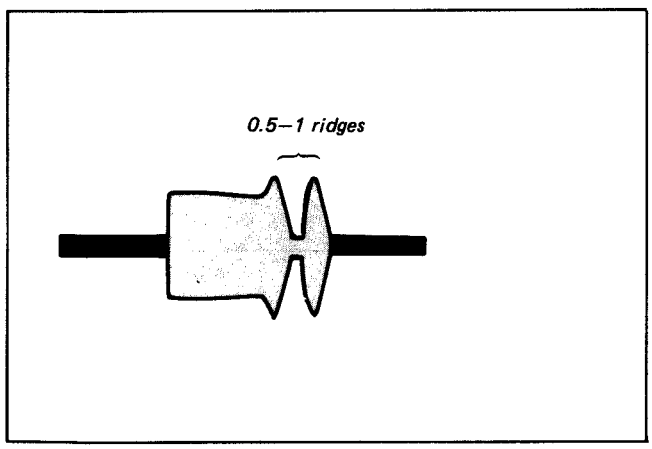

Fig. 2-61

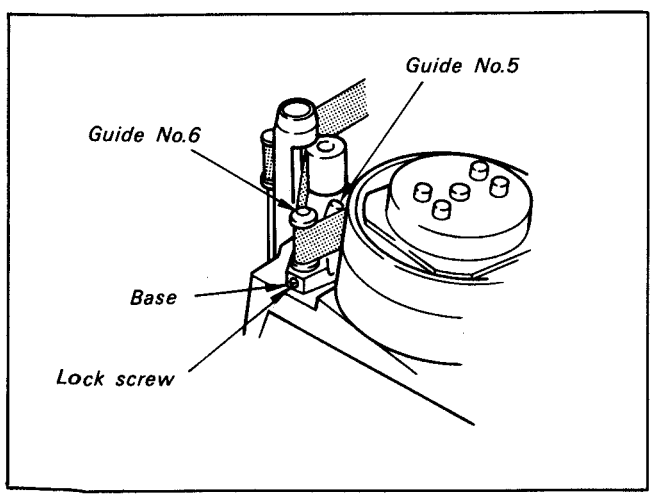

Fig. 2-62

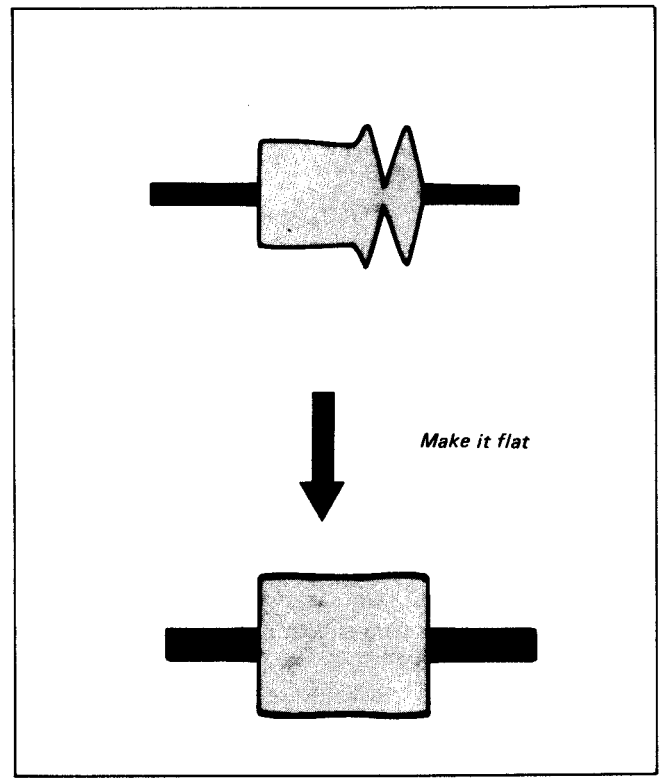

Fig. 2-63

2-4-5. Check after Adjustment

1. Tracking check

1) Play back the tracking alignment tape and turn the track shift knob of the track shift and monitor jig so that the RF waveform amplitude is maximized (See Fig. 2-64).
2) Confirm that the minimum value of the amplitude (EMIN) exceeds 80% of the maximum value (EMAX) (See Fig. 2-65).
3) Confirm that the waveform has no variations (See Fig. 2-66).

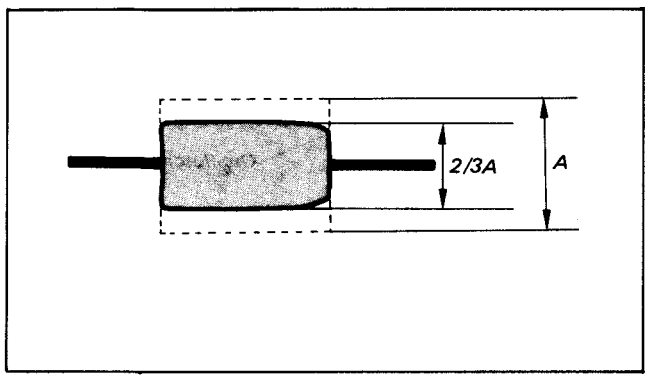

Fig. 2-64

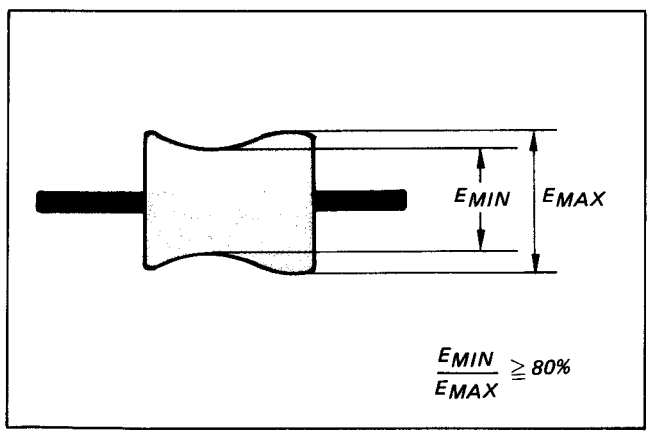

Fig. 2-65

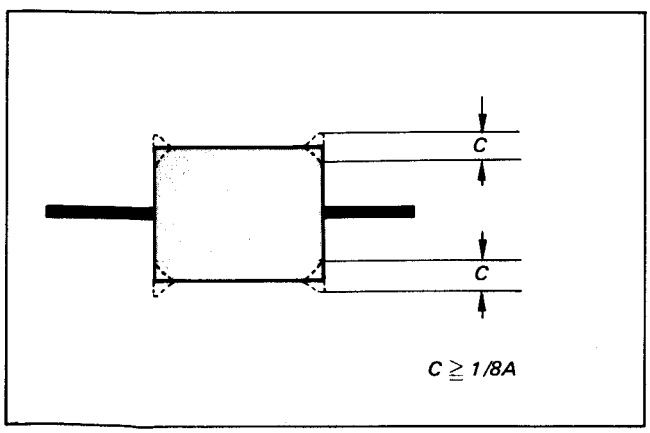

Fig. 2-66

2. Checking rising edge

1) Play back the tracking alignment tape.
2) Turn the track shift knob of the track shift and monitor jig so that the RF waveform amplitude is maximized.
3) Instantaneously short-circuit the MD-10 board REC SW contact spring to GND, and light the standby LED so that the standby mode is attained (See Fig. 2-50).
4) Turn EJECT switch on to eject so that threading is repeated again.
5) Set to playback mode and confirm that the RF waveform rises horizontally. Confirm that there are no wrinkles in the tape in the vicinity of the pin roller (See Fig. 2-67).
6) Light the standby LED so that the standby mode is attained, and repeatedly confirm 1).

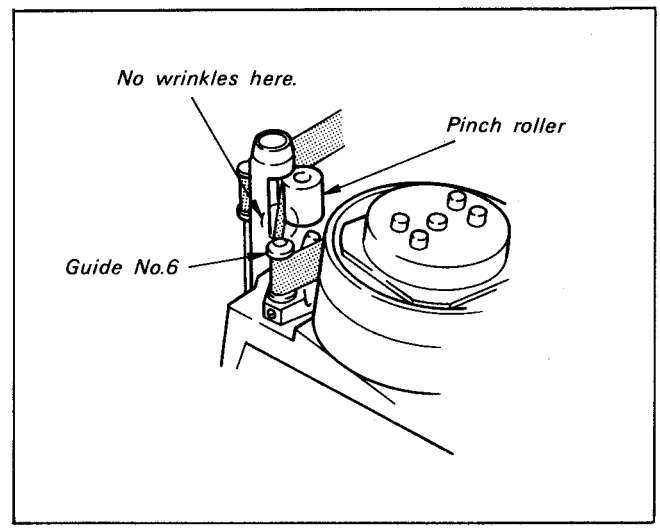

Fig. 2-67

3. Tape running check

Set to playback mode and confirm that the tape is neither lifted up nor curled severely at the lower flange of guide No.2, upper flange of guide No.3 and upper flange of guide No.6, and not curled at the upper and lower flanges of guide No.7 (See Fig. 2-68).

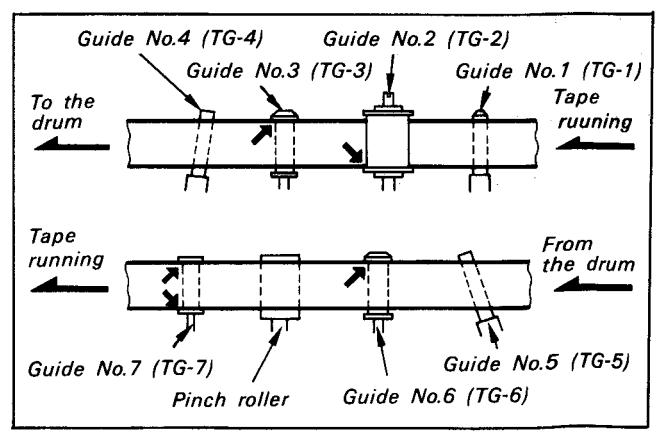

Fig. 2-68

3. VIDEO ADJUSTMENTS

The measuring instruments listed below are used for adjustment of the video section.

Equipment Required:

1) Monitor TV
2) AC adapter (Modification is needed for AC-V8 series; the procedure is found under Camera Adjustment 1-3, 3) AC-V8 series Modification Procedure.)
3) Dual-trace oscilloscope, band range over 10 MHz, with delay mode (Unless otherwise indicated, use a 10 : 1 probe.)
4) Frequency counter
5) Track shift & monitor jig
   Part No.: J-6080-851-A
6) Digital voltmeter
7) Audio generator
8) Audio level meter
9) Audio distortion meter
10) Audio attenuator
11) Stable DC power supply
12) Alignment tape
    For tracking adjustment: WR5-1C
    Part No.: 8-967-005-06
    For video frequency response adjustment: WR5-2C
    Part No.: 8-967-995-16
    For operation check: WR5-3CL, WR5-3CS or WR5-3CSP
    Part No.: 8-967-995-36 (WR5-3CL)
    8-967-995-26 (WR5-3CS)
    8-967-995-27 (WR5-3CSP)
13) Tape end detection filter
    Part No.: J-6080-848-A
14) Playback equipment (EV-A300, EV-S700, etc.)

Equipment Connection:

Refer to the section on Camera Adjustment "1-3. Track shift & monitor jig connection procedure" for the connection and recording procedures for the track shift & monitor jig. Also, refer to "2-4. Tape Path Adjustment", "2-4-1. Preparations for Adjustment" for playback procedure.
Refer to the Service Manual for the playback equipment for the connection when using playback equipment to measure.

Measurement Procedure:

When using the oscilloscope probe to measure chip components, solder a lead to the location to be measured and connect the probe to the lead.

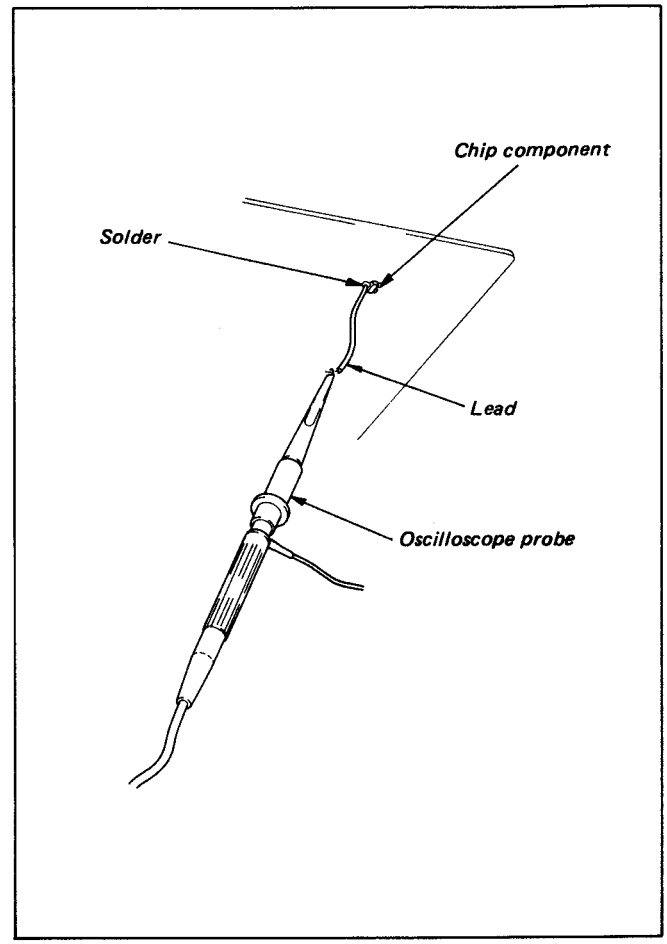

Measurement procedure

Alignment Tape

Tape	Contents	Use	Tape Speed
Tracking (WR5-1C)	1. Recording area: PCM ~ video 2. Recording content: CH2: 1 MHz linearity adjustment signal (CH1: 9 MHz)	Drum linearity adjustment	SP
Video frequency response (WR5-2C)	1. Recording area: Video 2. Recording content: RF sweep 0 to 10 MHz 3. Marker: 1, 3.58 5.5 and 7 MHz	Frequency responce adjustment	LP
Operation check LP mode (WR5-3CL) SP mode (WR5-3CS or WR5-3CSP)	1. Recording area: Video, PCM 2. Recording contents ■ Video area ● Video signals: Colour-bars 10 sec, Monoscope 8 sec } Iterative *[Colour-bars]* 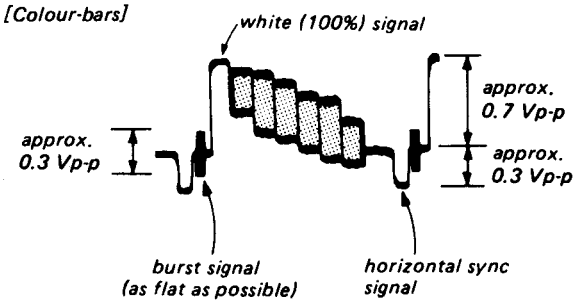 *colour-bar pattern* 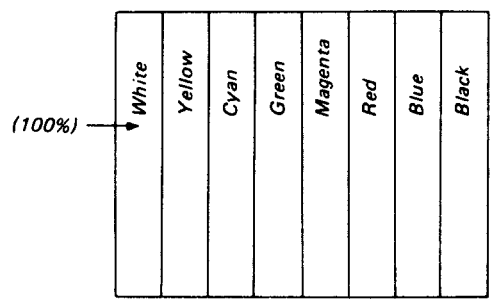 ● Audio signals (AFM): 400 Hz 60% modulation ■ PCM area (WR5-3CSP only) ● Audio signals (PCM) 1 kHz 0 dBs 10 sec 20 Hz −6 dBs 2 sec 400 Hz −6 dBs 4 sec } Iterative 14 kHz −0.7 dBs 2 sec	Operation check	LP, SP

Adjustment Order

Perform adjustment in the following order.

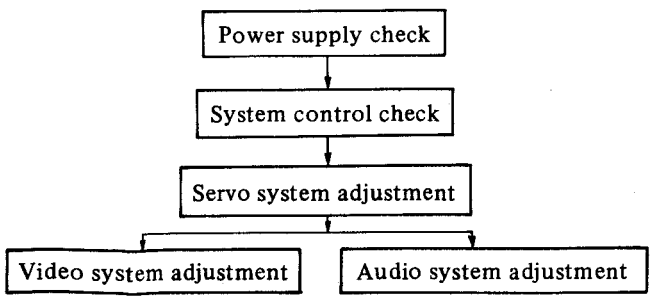

3-1. EVER 5 V ADJUSTMENT (MD-10 BOARD)

Mode: STOP
Digital voltmeter: Q101 collector
Adjustment Procedure:

1) Supply 7.0 ±0.5 V from the stable DC power supply to the power supply contact point spring. (See Fig. 3-1)
2) Adjust RV101 for a reading of 5.00 ±0.05 V.

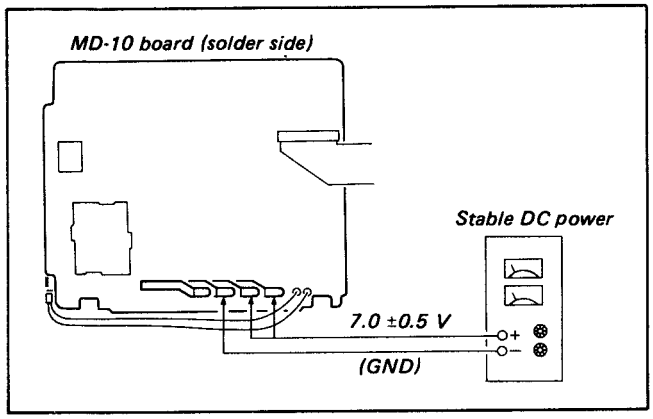

Fig. 3-1 EVER 5 V adjustment

3-2. SYSTEM CONTROL ADJUSTMENT

3-2-1. Battery Down Adjustment (MD-10 Board)

Mode: STOP
Digital voltmeter: Q124 emitter
Adjustment Procedure:

1) Supply 5.78 ±0.01 V from the stable DC power supply to the power supply contact point spring.
2) Short IC101 pin (6) to GND.
3) Turn RV102 counterclockwise and stop at the point where Q124 emitter goes from high to low.
   Note:
   Q124 changes even if RV102 is turned clockwise, but this is different from the adjustment point, so be sure to turn it counterclockwise.

3-2-2. Tape End Detection Adjustment

Oscilloscope: CH1: Q118 base (AC range)
CH2: Q119 collector (DC range)
Adjustment Procedure:

1) Fix the erase prevention switch so that it is pushed in with a tape, etc. (See Fig. 3-2)
2) Without inserting a cassette, lower the cassette compartment and load.
3) Place the tape end detection filter in the space between the cassette compartment and the END sensor light receiving portion. (See Fig. 3-3)
   Note:
   The filter consists of a double layer, and should be used as is.
4) Place in recording mode.
   Note:
   Refer to the section on Camera Adjustment, "1-5. Precautions" for the recording mode procedure.
5) Set RV001 fully clockwise.
6) Adjust RV001 by turning counterclockwise so that Q119 collector voltage (DC level) is more than 2 V and less than 3 V at the rising point of the light-up pulse. (See Fig. 3-4)
   Note:
   If voltage is less than 2 V at this time, END detection will operate and shut-off occurs, so in this case, turn RV001 slightly clockwise, then put into recording mode again and readjust.
7) Remove the tape end detection filter and confirm that Q119 collector voltage is less than 0.2 V.

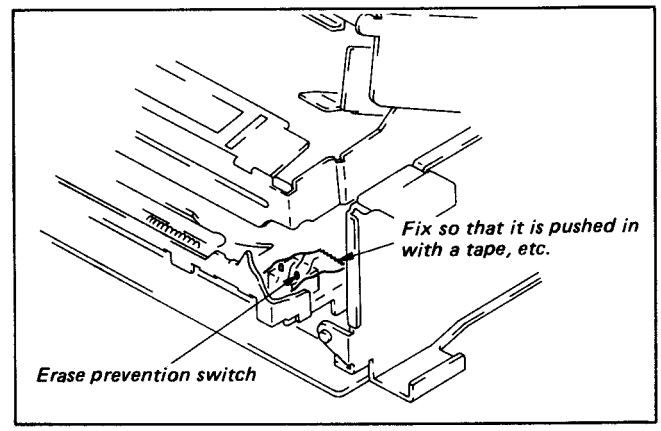

Fig. 3-2

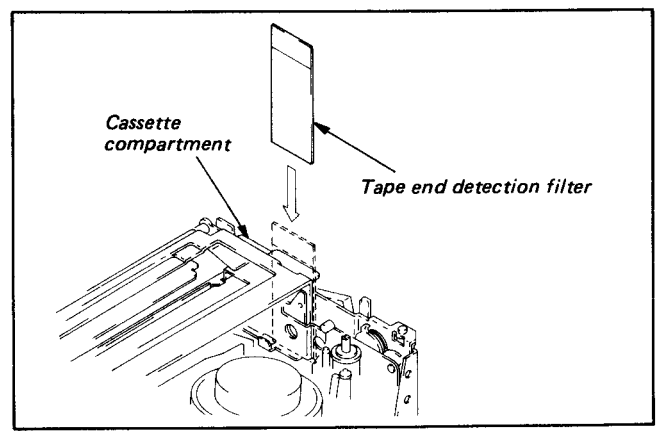

Fig. 3-3

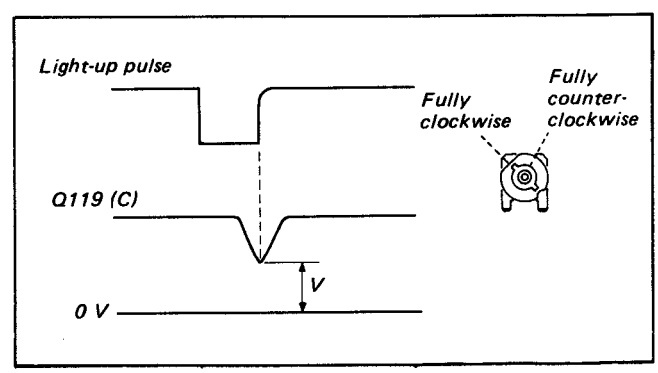

Fig. 3-4 Tape end detection adjustment

3-3. SERVO SYSTEM ADJUSTMENT

3-3-1. Capstan DC Bias Adjustment (MD-10 Board)

Mode: Playback (Refer to 2-4. Tape Path Adjustment, 2-4-1. Preparation for Adjustment 4) for playback procedure.)
Tape: An unused tape
Frequency counter: SV-16 board pin (21)
Adjustment Procedure:
1) Set SP/LP SW to SP mode.
Adjust to 1154 ±1 Hz by turning RV202.

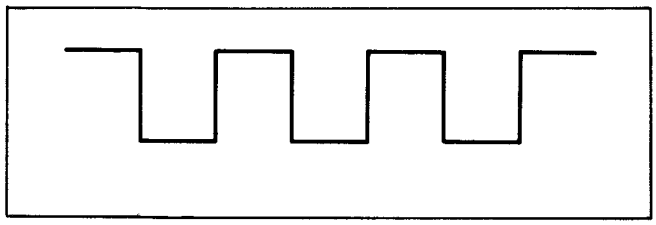

Fig. 3-5 Capstan DC bias adjustment

2) Set SP/LP SW to LP mode.
Adjust to 577 ±1 Hz by turning RV204.

3-3-2. RF Switching Position Adjustment (MD-10 Board)

Mode: Recording
Subject: Color-bar chart (standard frame)
Adjustment Procedure:
1) Record the color-bar chart.
2) Play back the recorded tape on playback equipment (EV-A300, EV-S700, etc.)
3) Check the switching position on the playback equipment. (Fig. 3-6)
Note:
Refer to the Service Manual for the playback equipment, "RF Switching Position Adjustment".
4) If the specifications are not satisfied, turn RV203 and repeat steps 1) – 3).

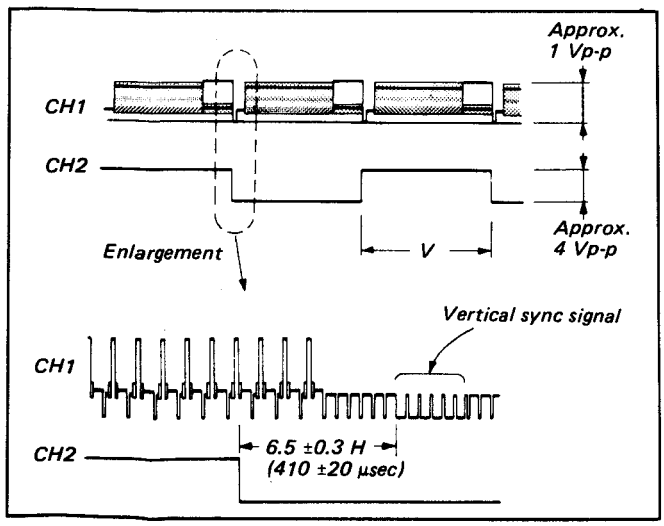

Fig. 3-6 RF switching position adjustment

3-3-3. ATF Recording Current Adjustment (RP-29 Board)

Mode: Recording
Tape: MP tape
Connection: Connect the following three points with jumpers.
- RP-29 board pin (2) (REC AFM) and pin (9) (REG GND)
- RP-29 board pin (3) (REC C) and pin (9) (REG GND)
- RP-29 board pin (4) (REC Y) and pin (9) (REG GND)

Adjustment Procedure:
1) Connect the oscilloscope to RP-29 board pin (1) (REC ATF) and confirm that the ATF pilot signal is 0.62 ±0.06 Vp-p (102 kHz – 165 kHz). (Fig. 3-7)
2) Reconnect the oscilloscope to RP-29 board pin (17).
3) Turn RV502 on the RP-29 board and adjust to 8 mVp-p (LP mode), 11 mVp-p (SP mode) (Fig. 3-8)
4) Remove the jumpers after completing adjustment.

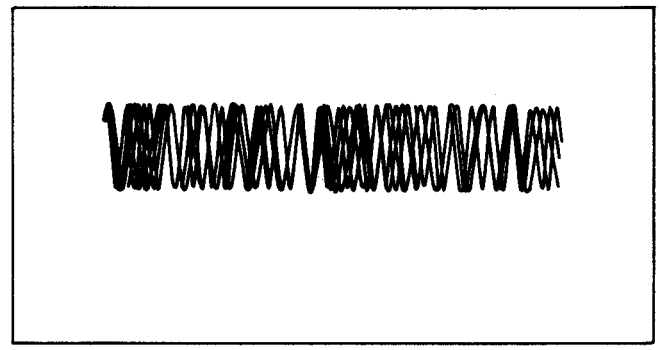

Fig. 3-7

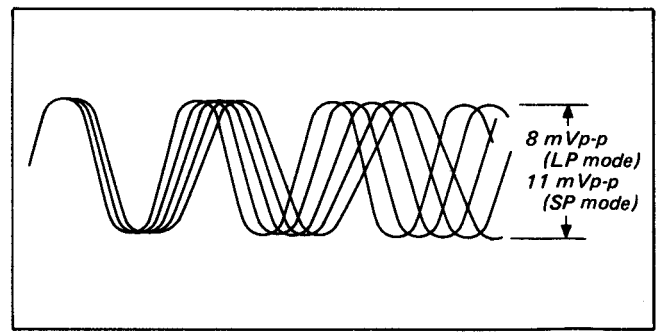

Fig. 3-8 ATF recording current adjustment

3-4. VIDEO SYSTEM ADJUSTMENT

As a general rule, video system adjustment should be performed in the following order.

Adjustment Order

1) Y FM Carrier Frequency Adjustment
2) Y FM Deviation Adjustment
3) AC Clip Adjustment
4) REC Y Recording Current Adjustment
5)a REC C Recording Current Adjustment
5)b REC C Recording Current Adjustment (simplified method)

3-4-1. Y FM Carrier Frequency Adjustment (YM-2 Board)

Mode: Recording
Frequency counter: YM-2 board pin ①
Adjustment Procedure:

1) Connect YM-2 board pin ⑮ (REC Y IN) to pin ⑦ (REG GND) with a jumper.
2) Set RV504 on YM-2 board to mechanical center. (Fig. 3-9)
3) Turn RV505 on YM-2 board and adjust to 4.38 ±0.02 MHz. (Fig. 3-10)
4) Perform "3-4-3. AC Clip Adjustment" after completing adjustment.

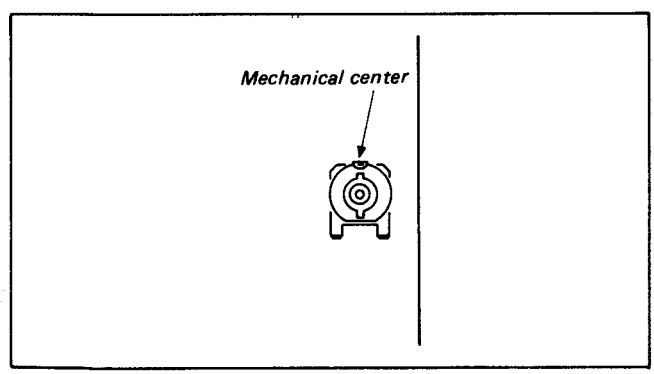

Fig. 3-9

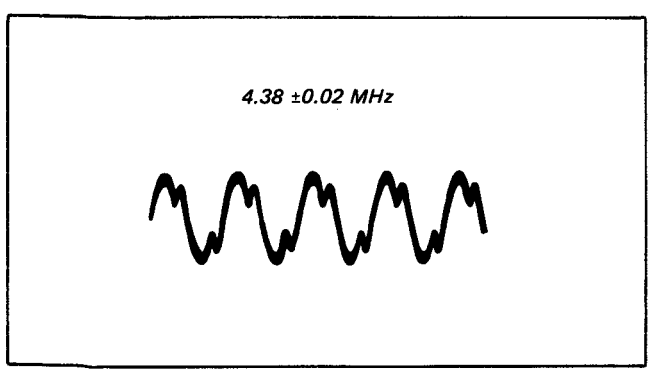

Fig. 3-10 Y FM carrier frequency adjustment

3-4-2. Y FM Deviation Adjustment (YM-2 Board)

Mode: Recording
Subject: Color-bar chart (standard frame)
Adjustment Procedure:

1) Record the color-bar chart.
2) Play back the recorded tape on playback equipment (EV-A300, EV-S700, etc.).
3) Confirm that VIDEO OUT level is $1.00^{+0.025}_{-0.05}$ (Fig. 3-11).
   Note:
   Refer to the Service Manual for the playback equipment, "VIDEO OUT Level Adjustemnt" for the check method.
4) If the specifications are not satisfied, turn RV503 on the YM-2 board and repeat steps 1) – 3).

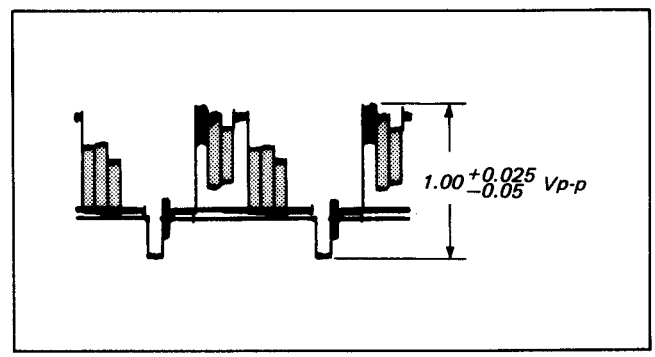

Fig. 3-11 Y FM deviation adjustment

3-4-3. AC Clip Adjustment (YM-2 Board)

Mode: Recording
Subject: All white pattern
Adjustment Procedure:

1) Record the all white pattern.
2) Play back the recorded tape on playback equipment (EV-A300, EV-S700, etc.).
3) Confirm that there is no slant in the pedestal portion of the output waveform on playback equipment VIDEO OUT, and that the shape of the sync signal is normal. (Fig. 3-12)
4) If not, turn RV504 on the YM-2 board and repeat steps 1) – 3).
5) Check that there is no white smear or black smear on the monitor picture.

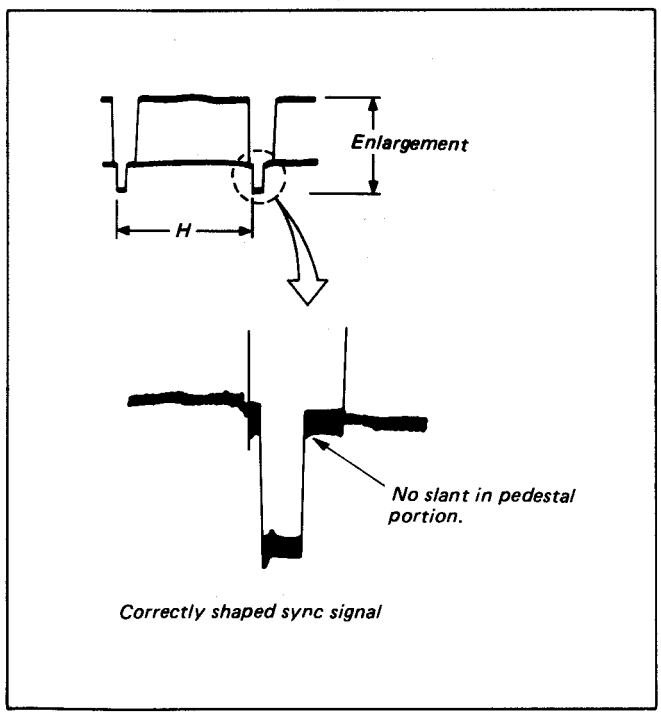

Fig. 3-12 AC clip adjustment

3-4-4. REC Y Recording Current Adjustment (RP-29 Board)

Mode: Recording
Tape: MP tape
Connection: Connect the following four points with jumpers.

- YM-2 board pin (15) (REC Y IN) and pin (24) (REG GND)
- RP-29 board pin (1) (REC ATF) and pin (9) (REG GND)
- RP-29 board pin (2) (REC AFM) and pin (9) (REG GND)
- RP-29 board pin (3) (REC C) and pin (9) (REG GND)

Oscilloscope: RP-29 board pin (17)
Adjustment Procedure: Turn RV510 on the RP-29 board and adjust to 210 ±5 mVp-p. (Fig. 3-13)

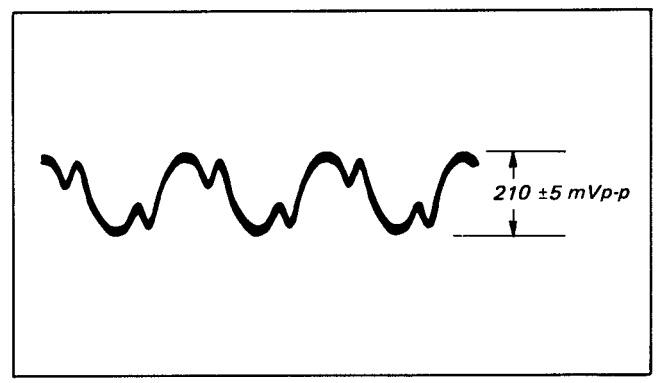

Fig. 3-13 REC Y recording current adjustment

3-4-5a. REC C Recording Current Adjustment (RP-29 Board)

Mode: Recording
Tape: MP tape
Connection: Connect the following three points with jumpers.

- RP-29 board pin ① (REC ATF) and pin ⑨ (REG GND)
- RP-29 board pin ② (REC AFM) and pin ⑨ (REG GND)
- RP-29 board pin ④ (REC Y) and pin ⑨ (REG GND)

Adjustment Procedure:

1) Remove the solder at RP-29 board pin ③ (REC C) as shown in Fig. 3-14 so that the pin is completely off the land, and input a 750 kHz, 0.4 ±0.01 Vp-p sine wave from an RC oscillator.
2) Connect the oscilloscope to RP-29 board pin ⑰ and adjust to 42 mVp-p with RV508. (Fig. 3-15)

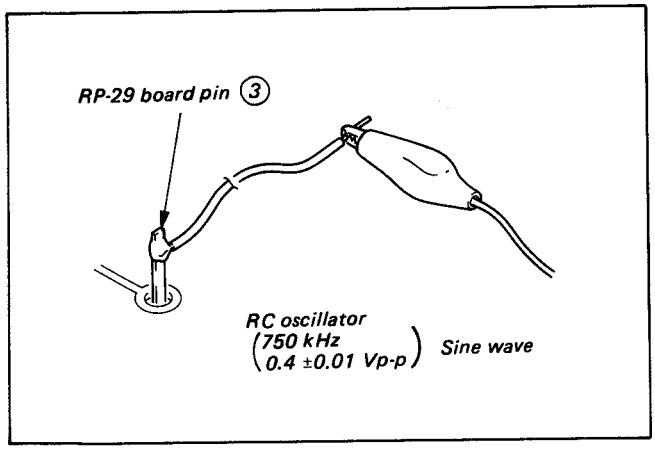

Fig. 3-14

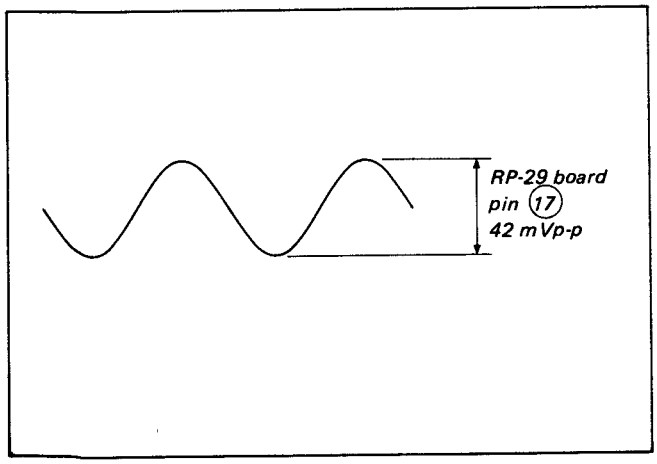

Fig. 3-15 REC C recording current adjustment

3-4-5b. REC C Recording Current Adjustment (simplified method)

Mode: Recording
Subject: Color-bar chart (standard frame)
Adjustment Procedure: Connect the oscilloscope to RP-29 board pin ③, and memorize red level.
Connect the oscilloscope to RP-29 board pin ⑰, and adjust RV508 so that red level is 1/10 against the level at pin ③. (Fig. 3-16)

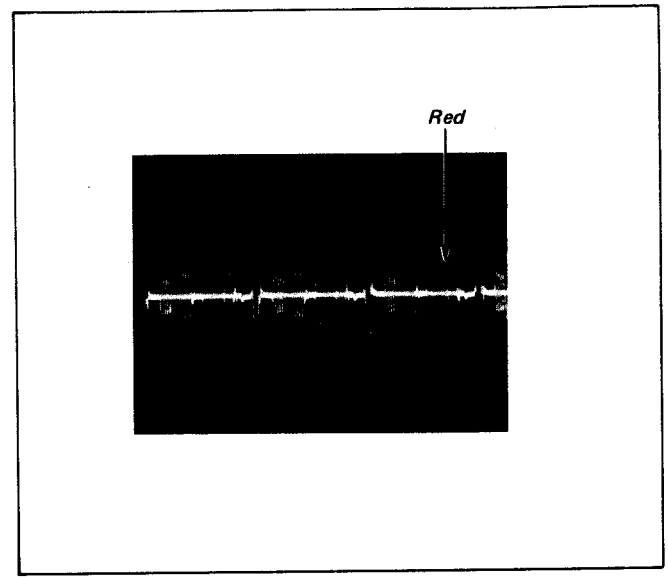

Fig. 3-16 REC C recording current adjustment (simplified method)

3-5. AUDIO SYSTEM ADJUSTMENT

Connection of audio measurement equipment:
Connect as shown below when inputting audio signal to MIC connector.

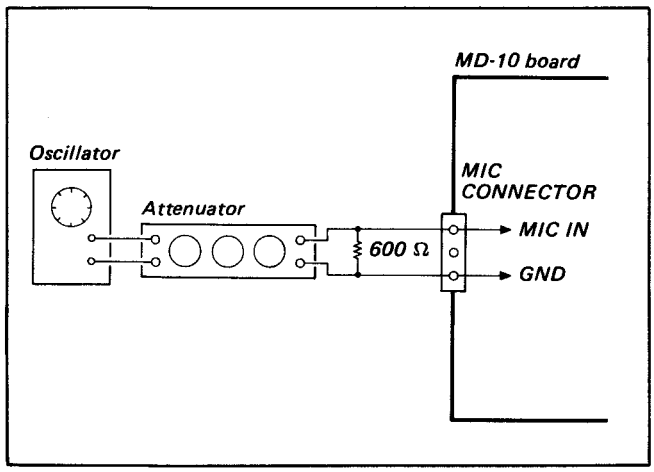

Refer to the Service Manual for the playback equipment when measuring using playback equipment.

Adjustment Order

1) AFM Carrier Frequency Adjustmnt
2) Carrier Level Check
3) Deviation Adjustment
4) Noise Level Check
5) Frequency Response Check
6) AGC Check
7) Distortion Check

3-5-1. AFM Carrier Frequency Adjustment (AU-16 Board)

Mode: Recording
Audio input signal: no signal (Short MIC connector pin ① (yellow) and pin ③ (white).)
Frequency counter: AU-16 board pin ②
Adjustment Procedure: Turn RV401 on the AU-16 board and adjust to 1507 ±2 kHz.

3-5-2. Carrier Level Check (AU-16 Board)

Mode: Recording
Audio input signal: no signal
Oscilloscope: AU-16 board pin ②
Adjustment Procedure: Check that the signal level is 120 ±20 mVp-p. (Fig. 3-18)

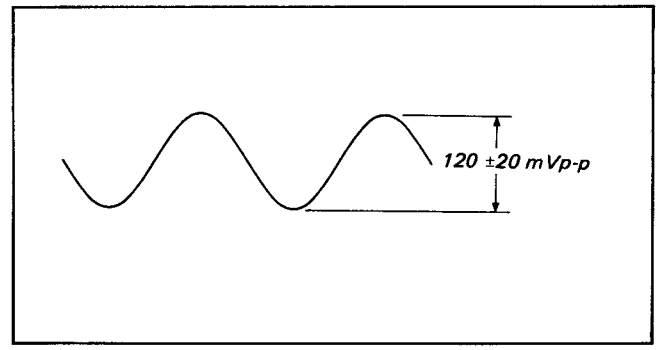

Fig. 3-18 Carrier level check

3-5-3. Deviation Adjustment

Adjustment Procedure:
1) Play back the reference tape (WR5-3CS) on playback equipment (EV-A300, EV-S700, etc.) and measure AUDIO OUT level (S dB).
2) Input 400 Hz −66 dB to CCD-M8E MIC connector pin ③ (white) and record for more than 10 seconds.
3) Play back the portion recorded in step 2) on playback equipment and confirm that the AUDIO OUT level is S ±1 dB.
4) If the specifications are not met, adjust according to the following.
   i) If level is smaller than S −1 dB:
   Turn RV402 on the AU-16 board counterclockwise and adjust so that the specifications are met by repeating steps 2) and 3).
   ii) If level is larger than S +1 dB:
   Turn RV402 on the AU-16 board clockwise and adjust so that the specifications are met by repeating steps 2) and 3).

3-5-4. AFM Recording Current Adjustment (RP-29 Board)

Mode: Recording
Tape: MP tape
Connection: Connect the following three points with jumpers.

- RP-29 board pin ① (REC AFT) and pin ⑨ (REG GND)
- RP-29 board pin ③ (REC C) and pin ⑨ (REG GND)
- RP-29 board pin ④ (REC Y) and pin ⑨ (REG GND)

Adjustment Procedure:

1) Connect the oscilloscope to RP-29 board pin ② and confirm that the AFM carrier signal (15 MHz) is 120 ±20 mVp-p. (Fig. 3-19)
2) Reconnect the oscilloscope to RP-29 board pin ⑰.
3) Turn RV501 on the RP-29 board and adjust to 9 mVp-p. (Fig. 3-20)

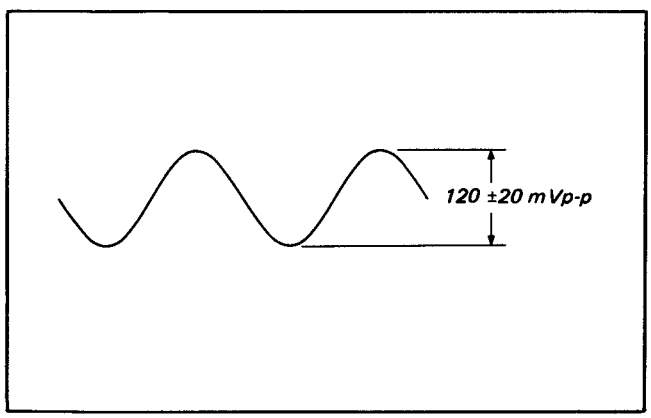

Fig. 3-19

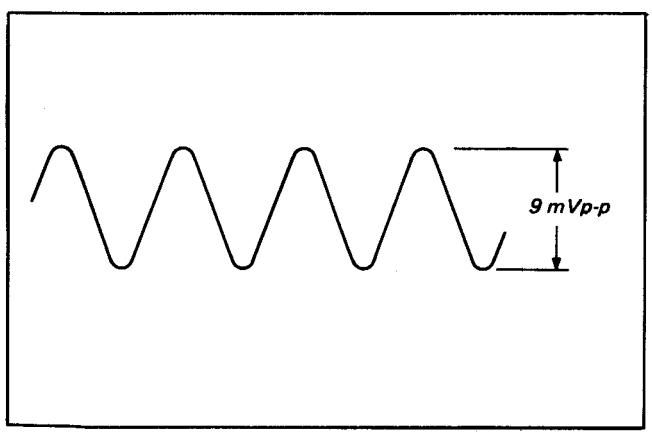

Fig. 3-20 AFM recording current adjustment

3-5-5. Noise Level Check

Audio input signal: no signal (Short MIC connector pin ① (yellow) and pin ③ (white).

Adjustment Procedure:

1) Record using CCD-M8E.
2) Play back the recorded portion on playback equipment (EV-A300, EV-S700, etc.).
3) Measure the playback equipment AUDIO OUT level for more than 3 seconds and confirm that it is below −52 dB.

3-5-6. Frequency Response Check

1) Input 400 Hz, 1 kHz, 150 Hz, 20 kHz (all −66 dB) signals to MIC connector pin ③ (white) in order for 10 seconds each and record on tape.
2) Play back the recorded portion on playback equipment (EV-A300, EV-S700, etc.).
3) Measure the playback equipment AUDIO OUT level and confirm that the 1 kHz, 150 Hz and 20 kHz levels are as follows relative to the 400 Hz level (−x dB).
   400 Hz . . . . −x dB
   1 kHz . . . . . −x ±3 dB
   150 Hz . . . . −x less than −3 dB
   20 kHz . . . . −x less than −3 dB

3-5-7. AGC Check

1) Input a 400 Hz, −46 dB signal to MIC connector pin ③ (white) and record for more than 10 seconds.
2) Play back the recorded portion on playback equipment (EV-A300, EV-S700, etc.).
3) Check that the playback equipment AUDIO OUT level is less than 0 dB.

3-5-8. Distortion Check

1) Input a 400 Hz, −66 dB signal to MIC connector pin ③ (white) and record for more than 10 seconds.
2) Play back the recorded portion on playback equipment (EV-A300, EV-S700, etc.).
3) Confirm that playback equipment AUDIO OUT distortion is less than 1%.

MD-10 BOARD (COMPONENT SIDE)

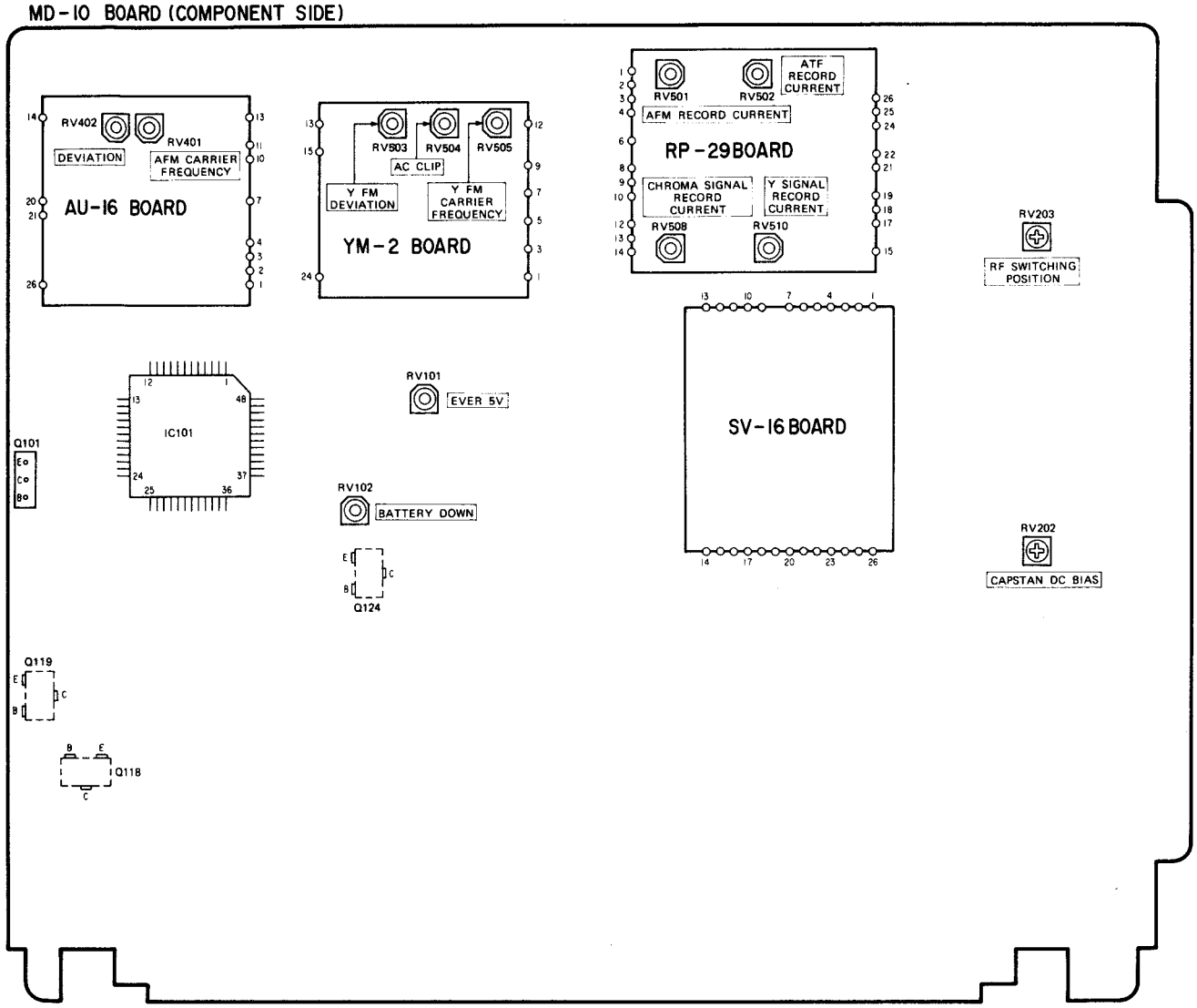

CC-3 BOARD

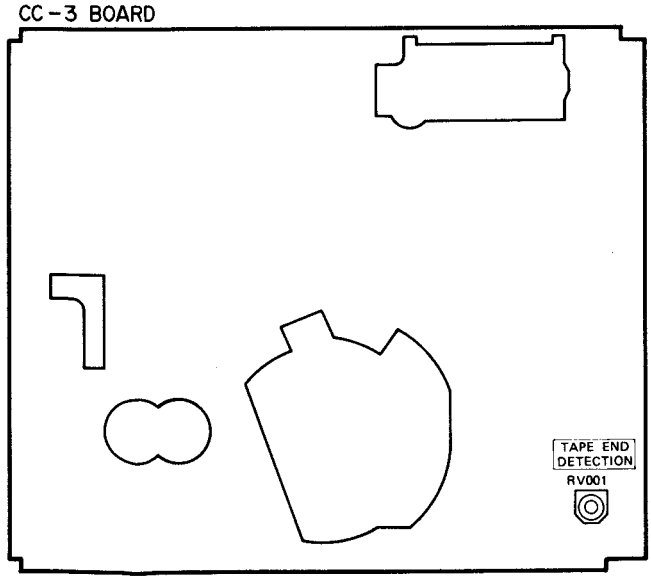

CCD-M8E

SONY

SERVICE MANUAL

AEP Model
Australian Model
E Model
UK Model

June, 1986

SUPPLEMENT-3

- **The contents of the Supplements-1 and -2 have been incorporated into the applicable items of the Service Manual.**
- **Camera section, video, audio, servo, and system control section, and HIC circuits have been changed.**
  The boards whose circuits have been changed are VC-4, VC-5, VC-6, MD-10 boards, and HIC block (DT-60, SH-1, MX-2, IA-2, ED-11, RP-29, YM-2, AU-16, and SV-16 boards).
  Discriminates the boards which have been changed with the ending code numbers given to the respective boards.
- The positions of the code numbers marked on the respective boards such as VC-4, VC-5, VC-6, and MD-10 boards are as shown on page 3.
- The parts whose constants have been changed are as shown below.

No.	Part No.	Description			Remark
	*A-7060-287-A	B-654 (VC-4, 5, 6)			
		CAMERA BOARD, COMPLETE			
		**********			
		CAPACITOR			
C681	1-162-638-11	CERAMIC CHIP 1MF		16V	
C685	1-162-637-91	CERAMIC CHIP 0.47MF		16V	
C686	1-162-637-91	CERAMIC CHIP 0.47MF		16V	
C687	1-162-637-91	CERAMIC CHIP 0.47MF		16V	
C787	1-163-109-00	CERAMIC CHIP 47PF	5%	50V	
C790	1-135-091-00	TANTAL. CHIP 1.5MF	20%	10V	
		IC			
IC681	8-750-010-21	IC IU021-KIAA			
		COIL			
L801	1-410-371-21	INDUCTOR CHIP 1.5UH			
L805	1-408-767-21	INDUCTOR CHIP 1.5UH			
		RESISTOR			
R699	1-216-067-00	METAL CHIP	5.6K 5%	1/10W	
R971	1-216-071-00	METAL CHIP	8.2k 5%	1/10W	
	*A-7060-292-A	MD-10 BOARD, COMPLETE			
		**********			
	1-536-974-11	TERMINAL BOARD (D)			

No.	Part No.	Description			Remark
		CAPACITOR			
C002	1-163-127-00	CERAMIC CHIP 270PF	5%	50V	
C004	1-163-035-00	CERAMIC CHIP 0.047MF	10%	25V	
C008	1-135-073-00	TANTAL, CHIP 0.33MF	20%	35V	
C051	1-163-137-00	TANTAL, CHIP 4.7MF	20%	10V	
C245	1-163-035-00	CERAMIC CHIP 0.047MF	10%	25V	
C246	1-135-072-21	TANTAL. CHIP 0.22MF	20%	35V	
C247	1-135-072-21	TANTAL. CHIP 0.22MF	20%	35V	
		COIL			
L001	1-410-493-11	MICRO INDUCTOR 820UH			
		RESISTOR			
R003	1-216-057-00	METAL CHIP	2.2K 5%	1/10W	
R004	1-216-039-00	METAL CHIP	390 5%	1/10W	
R005	1-216-021-00	METAL CHIP	68 5%	1/10W	
R014	1-216-055-00	METAL CHIP	1.8K 5%	1/10W	
R015	1-216-057-00	METAL CHIP	2.2K 5%	1/10W	
R175	1-216-019-00	METAL CHIP	56 5%	1/10W	
		CRYSTAL			
X201	1-527-345-71	OSCILLATOR, CRYSTAL			
	*1-616-824-11	FH-4 BOARD			
		**********			
		RESISTOR			
R001	1-249-432-11	CARBON	18K 5%	1/6W	

MICROFILM

VIDEO

TABLE OF CONTENTS

Section	Title	Page
1.	ARRANGEMENT DIAGRAM FOR ADJUSTMENT PARTS	3
2.	SCHEMATIC DIAGRAMS AND PRINTED WIRING BOARDS	
2-1.	Frame Schematic Diagram	4
2-2.	Schematic Diagrams and Printed Wiring Board	7
	• VC-4, 5, 6 Board	8
	• MD-10 Board	18
	• MD-10, CC-3, ES-11, FH-3, FP-8, FP-14, FP-16 Board	26
	• DT-60 Board	36
	• SH-1 Board	41
	• MX-2 Board	46
	• IA-1 Board	51
	• ED-11 Board	55
	• RP-29 Board	59
	• YM-2 Board	63
	• AU-16 Board	67
	• SV-16 Board	71

1. ARRANGEMENT DIAGRAM FOR ADJUSTMENT PARTS

VC-4 BOARD (SOLDER SIDE)

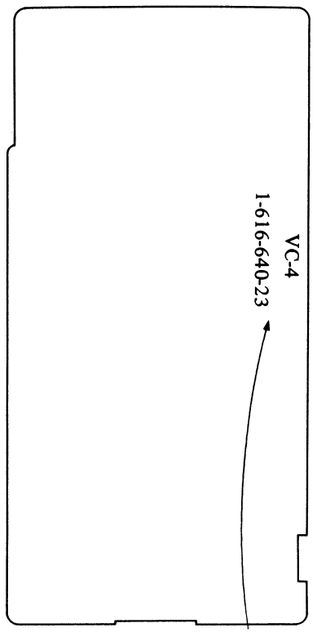

MD-10 BOARD (SOLDER SIDE)

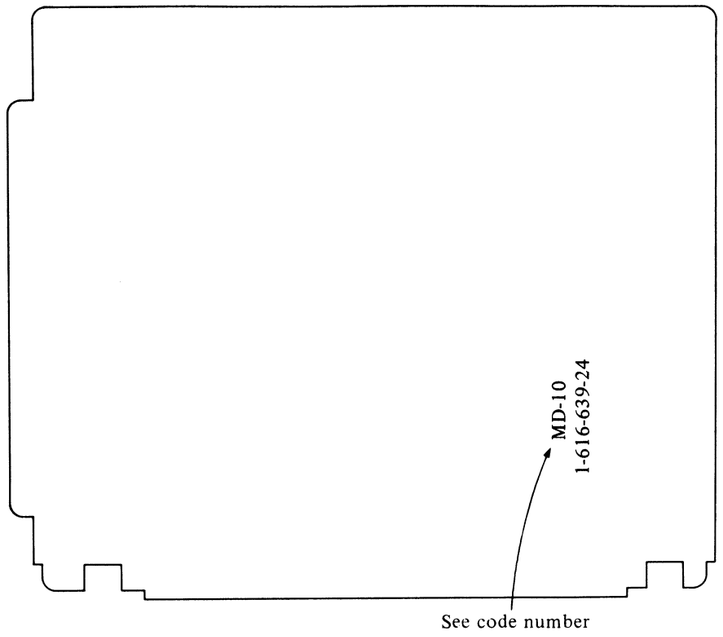

VC-5 BOARD (SOLDER SIDE)

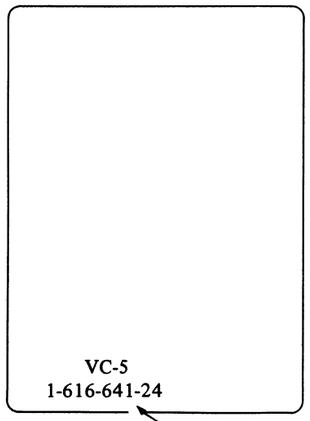

VC-6 BOARD (SOLDER SIDE)

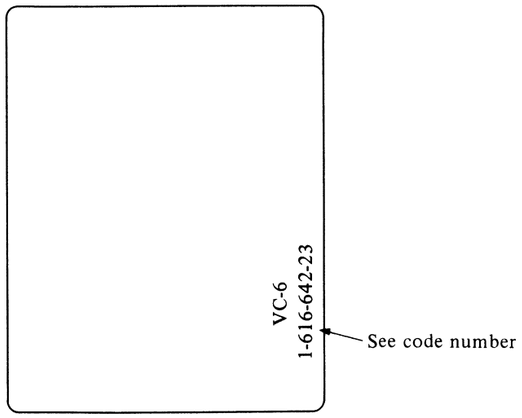

2-1. FRAME SCHEMATIC DIAGRAM

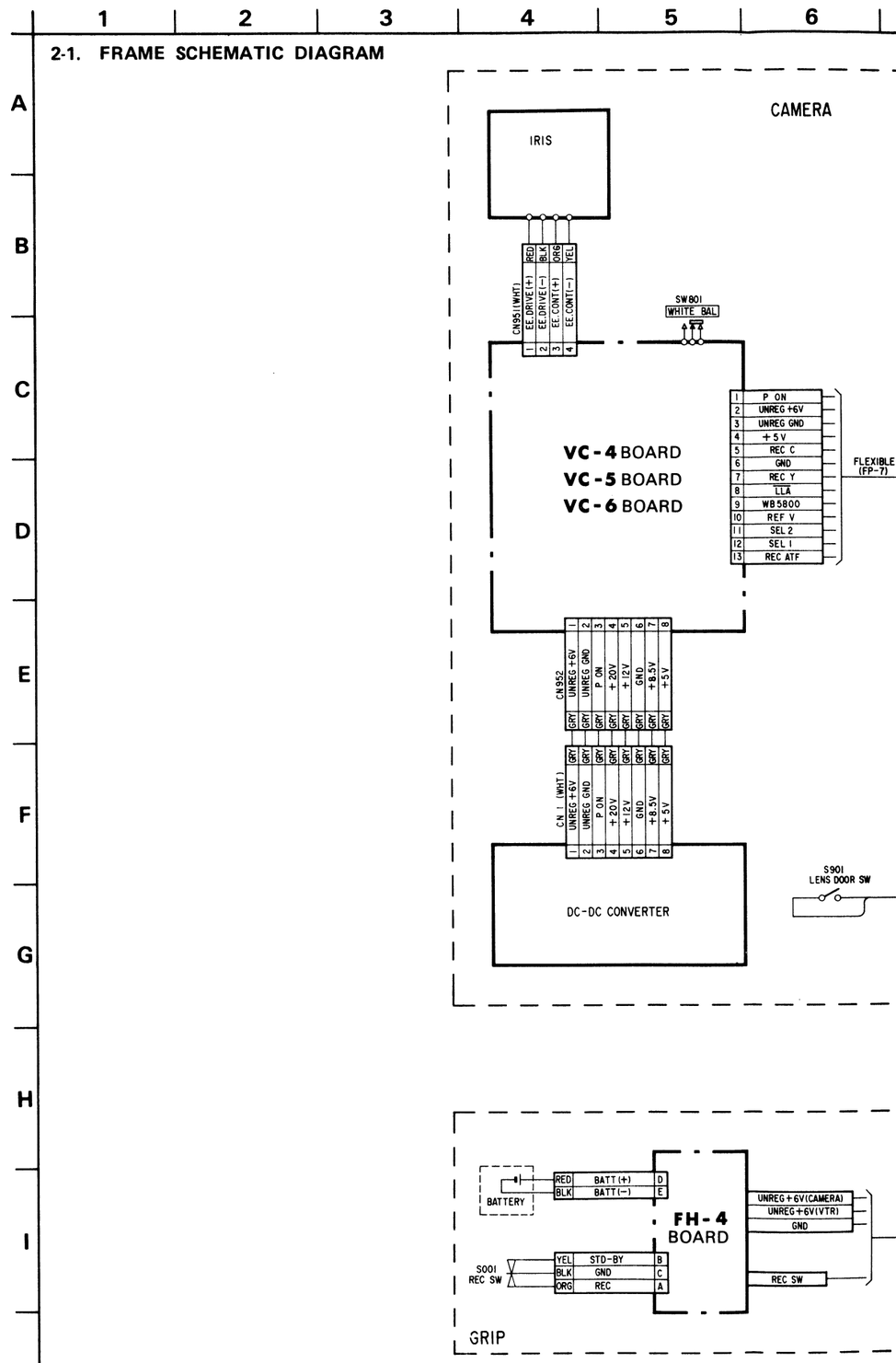

FRAME FRAME

5 6 7 8 9 10 11 12 13 14 15 16 17 18 19 20

CAMERA

SW801 WHITE BAL

C-4 BOARD
C-5 BOARD
C-6 BOARD

1	P ON
2	UNREG +6V
3	UNREG GND
4	+5V
5	REC C
6	GND
7	REC Y
8	LLA
9	WB5800
10	REF V
11	SEL 2
12	SEL 1
13	REC ATF

FLEXIBLE (FP-7)

UNREG GND	GRY	1	2
P ON	GRY	3	4
+20V	GRY	5	6
+12V	GRY	7	8
GND	GRY	9	10
+8.5V	GRY	11	12
+5V	GRY	13	14

DC CONVERTER

S901 LENS DOOR SW

FH-4 BOARD

BATT(+)	D	
BATT(−)	E	
STD-BY	B	
GND	C	
REC	A	

UNREG+6V(CAMERA)
UNREG+6V(VTR)
GND
REC SW

PIN TERMINAL

FLEXIBLE (FP-7)

REF V	10
REC C	5
REC Y	7
REC ATF	13
+5V	4
GND	6
UNREG+6V	2
UNREG GND	3
P ON	1

SERVO

VIDEO

VIDEO HEAD CH1 (RED) (RED)
VIDEO HEAD CH2 (WHT) (WHT)

CN502(WHT)

WHT	CH 1 (Y)	1	
PNK	CH 1 (X)	2	
BLK	GND	3	
BLK	GND	4	
PNK	CH 2 (X)	5	
WHT	CH 2 (Y)	6	

FLYING ERASE HEAD (BLU) (BLU)

CN503(WHT)

PNK	FEH (X)	1
WHT	FEH (Y)	2
BLK	GND	3

RF SWP
ATF ERROR

MD-10 BOARD

SP/LP	
RF SWP	
CAP FST	
CAP FG	
CTL DAT	
CLK	
DET DAT	
FG	
SRVO RST	
CAP ON	
CAP CCW/CW	

REC
FLY ERASE
MP/ME
CAP ON
TP DET
SIG ATF
SP/LP
REC SW

MIC UNIT

MIC (BLK) (BLK) (BLK)

WHT	MIC IN	
PNK	MIC +B	
YEL	GND	

AUDIO

SYSTEM CONTROL

POWER

LENS DOOR SW 1
LENS DOOR SW 2

FLEXIBLE (FP-7)

DRUM

CN201(RED)

1	DRUM (U)	WHT	
2	DRUM (V)	YEL	
3	COM	GRY	
4	DRUM (W)	ORG	

CN202(BLK)

1	D FG	YEL	
2	D PG	RED	
3	D COM	WHT	
4	GND	BLK	

(BLK) (BLK)

WHT	DRUM (U)	1	
YEL	DRUM (V)	2	
GRY	COM	3	
ORG	DRUM (W)	4	
YEL	D FG	1	
RED	D PG	2	
WHT	D COM	3	
	GND	4	

DRUM MOTOR
FG, PG

CAPSTAN MOTOR

8	CAP (U)	1	
7	CAP (V)	2	
9	HE	3	
10	VHE (+)	4	
11	VHE (−)	5	
6	CAP (W)	6	
12	UHE (+)	7	
13	UHE (−)	8	
14	WHE (+)	9	
15	WHE (−)	10	
5	UNREG GND	11	
4	C FG (−)	12	
3	RV +5V	13	
2	C FG (+)	14	
1	GND	15	

FLEXIBLE (FP-9)

M902 CAPSTAN MOTOR
CAPSTAN FG

S101 EJECT SW

EJECT SW	BRN	
GND	ORG	

1	DEW LED	RED	
2	CAUTION LED	BRN	
3	STANDBY LED	YEL	
4	TALLY LED	BLU	
5	UNREG GND	ORG	

RED	DEW LED	1	
BRN	CAUTION LED	2	
YEL	STANDBY LED	3	
BLU	TALLY LED	4	
ORG	UNREG GND	5	

FP-16 BOARD (FLEXIBLE)

D117 TAPE RUN/BATT (RED)
D112 STANDBY (ORG)
D111 LLA (YEL)
D118 WHITE BALANCE (YEL)

D114 TAPE RUN/BATT (RED)
D116 STANDBY (ORG)
D115 DEW (YEL)
D113 CAUTION (RED)

DEW SENSOR

5	T FG LED
6	T FG
7	SWD+5V
2	GND
4	MP/ME
12	MODE SW 3
13	MODE SW 1
14	MODE SW 2
11	GND
3	C IN SW
10	END SENS LED
9	DEW SENS 1
8	DEW SENS 2
1	LOAD MOTOR(+)
15	LOAD MOTOR(−)
17	CCD SW
16	GND
18	SWD+5V
19	END SENS
9	WB 5800
11	SEL 2
12	SEL 1
8	LLA

FLEXIBLE (FP-10)

CC-3 BOARD

T FG LED	
T FG	
SWD+5V	
GND	
MP/ME	
MODE SW 3	
MODE SW 1	
MODE SW 2	
GND	
C IN SW	
END SENS LED	
DEW SENS 1	
DEW SENS 2	
LOAD MOTOR(+)	
LOAD MOTOR(−)	
CCD SW	
GND	
SWD+5V	
END SENS	

FLEXIBLE (FP-7)

FLEXIBLE (FP-8)

T FG LED	
T FG	
SWD +5V	
MP/ME	
GND	
C IN SW	
END SENS LED	

FP-8 BOARD (FLEXIBLE)

S001 TAPE SELECT SW CASSETTE IN

D001 TAPE END SENSOR LED

FLEXIBLE (FP-14)

LOAD MOTOR(+)	
LOAD MOTOR(−)	

FP-14 BOARD (FLEXIBLE)
M901 LOADING MOTOR

S902 CCD SW

CCD SW	WHT	
GND	BLK	

RV001

END SENS		ORG	END SENS
SWD +5V	BRN	BRN	SWD +5V

ES-11 BOARD

2-2. SCHEMATIC DIAGRAMS AND PRINTED WIRING BOARD

- Caution to be exercised when replacing chip components
  Do not reuse the removed components but use new components.
  Caution should be taken as the negative side of the tantalum capacitor is weak toward heat.
- All capacitors which resistance pressure 50V or less are not indicated except for chemicals and tantalums. The unit is all μF (p is pF).
- All resistors are in ohms, 1/10W in chip resistance; 1/32W in printing resistance.
  kΩ =1000Ω and MΩ =1000kΩ
- All variable and adjustable resistors have characteristics curve B, which definition is omitted.
- ▭ : panel designation.
- ▭ : adjustment designation.
- ▬ : B+ line.

- Measuring conditions of voltage value and waveform
  (1) The subject is color bar of pattern box.
  (2) The voltage value is a reference value between the grounding.
  (The tester used is the digital multimeter DC10MΩ)
  (3) The voltage value are all in the recording mode of operation.

- **Signal path**
  - ➡ :REC Y SIGNAL
  - ➡ :REC Y & CHROMA SIGNAL
  - ➡ :REC CHROMA SIGNAL

VC-4 BOARD

IC681 ①	IC771 ㉕	DT-60 BOARD ⑬
IC681 ②	IC771 ㉝	DT-60 BOARD ⑭
IC681 ③, ⑤	IC771 ㊴	DT-60 BOARD ㊱
IC681 ⑮	DT-60 BOARD ①	DT-60 BOARD ㊲
IC681 ⑰	DT-60 BOARD ②, ⑪, ⑫	DT-60 BOARD ㊳
IC681 ⑱	DT-60 BOARD ③, ④	DT-60 BOARD ㊴
Q681 Ⓔ (TP681)	DT-60 BOARD ⑤, ⑥	SH-1 BOARD ⑨ (TP685)
IC771 ㉒	DT-60 BOARD ⑦, ⑩	SH-1 BOARD ㉖
IC771 ㉔	DT-60 BOARD ⑧, ⑨	SH-1 BOARD ㉗

VC-5 BOARD

TP801	MX-2 BOARD ㉒
TP802, 803	MX-2 BOARD ㉓
TP804, 805, 806	
TP807	
TP808	
TP810	
TP811	
MX-2 BOARD ⑳	
MX-2 BOARD ㉑	

VC-6 BOARD

ED-II BOARD ⑥, ⑦
ED-II BOARD ⑫
ED-II BOARD ⑮ (TP952)
ED-II BOARD ⑱
ED-II BOARD ㉒
ED-II BOARD ㉓ (TP951)
IA-I BOARD ⑨

7 8 9 10 11 12 13 14 15 16 17 18 19 20 21 22

SH-1 BOARD

VC-6 BOARD

IA-1 BOARD

ED-11 BOARD

MX-2 BOARD

CXD1011Q GENERATOR

Q773 2SA812 IRIS/AGC WHIGHTING

Q771 2SA812 LPF

IC801 TL431CLPB 9V REG

D951 IS2837

DL951 0.18μs

TP681 TP685 TP801 TP802 TP803 TP804 TP805 TP806 TP809 TP813 TP819 TP820 TP951 TP952 TP953 TP954 TP955

Q951 2SC1623 AGC AMP

Q952 2SC1623 AGC AMP

Q953 2SC1623 BUFFER

Q954 2SC1623 AMP

Q955 2SA812 AGC DET

Q956 2SC1623 BUFFER

LENS IRIS

DC-DC CONVERTER

TO MD-10 BOARD FLEXIBLE (FP-7)

FLEXIBLE (FP-5)

VC-4, 5, 6 (CAMERA) PRINTED WIRING BOARDS

- ⊗ : mark is slew hole.
- ○— : lead wire attached to the component side.
- ●— : lead wire attached to the pattern side.
- ▬ : pattern from the side which enables seeing.
- ▬ : pattern of the rear side.
- ▬ : B+ pattern.
- The voltage value is all recording mode of operation.

Note

Soldering side: Parts on the soldering side being seen from the soldering are stated.

Component side: Parts on the component side being seen from the component are stated.

Regarding color indication of patterns

* Patterns being seen in the state from the surface side are indicated in gray pattern and red pattern (B+ pattern).

* Pattern being seen in the state of the rear surface side is indicated in green pattern.

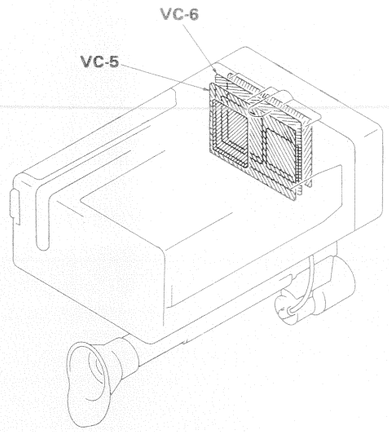

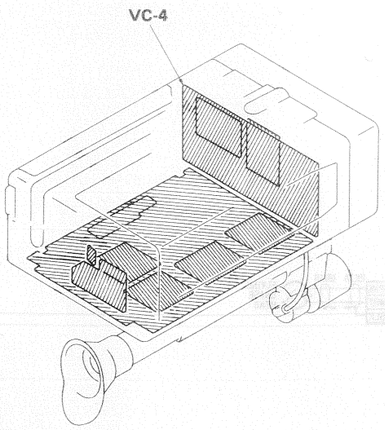

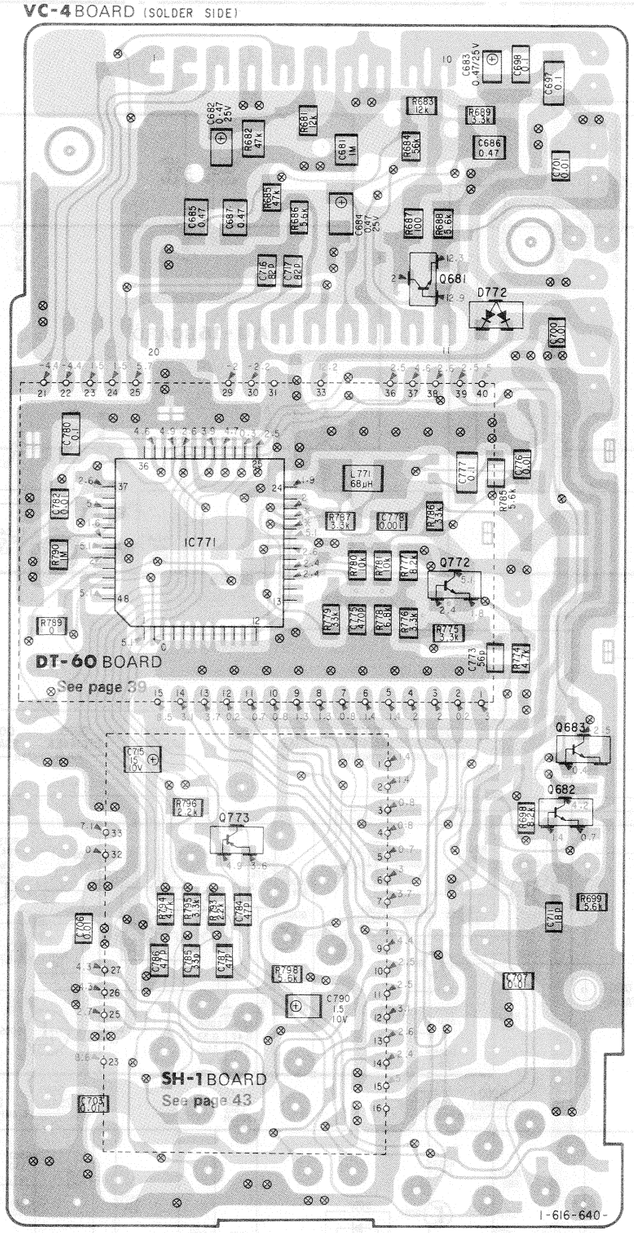

Q, IC	D	ADJ	TP
IC681			
681			
	772		
		CT771	
IC771			
772	771		
683			
682			
773			681
			685

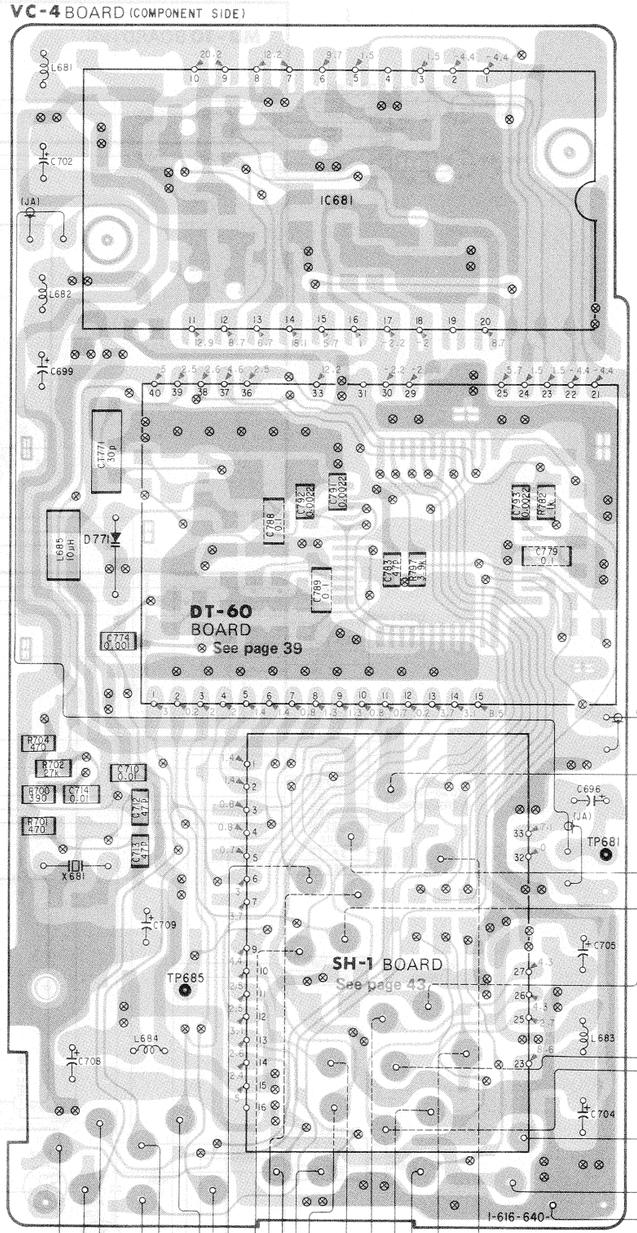

Q IC	
ADJ	
TP	

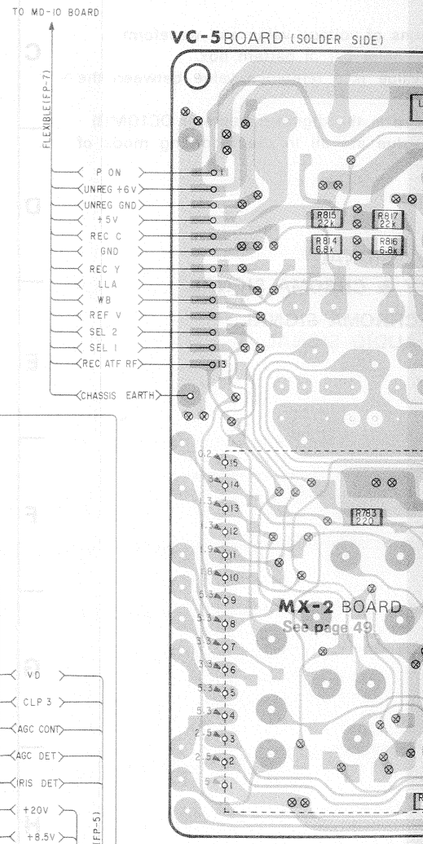

10 11 12 13 14 15 16 17 18 19 20 21 22 23 24 25 26

Q IC | 771 | 801 | 802 | IC801 | Q IC
ADJ | FL801 RV802 RV801 | ADJ
TP | 808 807 813 | 820 819 809 804 805 806 803 802 801 810 | TP

DC-DC CONVERTER

CN1 (WHT)

1	UNREG +6V	GRY
2	UNREG GND	GRY
3	P ON	GRY
4	+20V	GRY
5	+12V	GRY
6	GND	GRY
7	+8.5V	GRY
8	+5V	GRY

TO MD-10 BOARD

FLEXIBLE(FP-7)

P ON
UNREG +6V
UNREG GND
+5V
REC C
GND
REC Y
LLA
WB
REF V
SEL 2
SEL 1
REC ATF RF
CHASSIS EARTH

FLEXIBLE(FP-5)

P ON
UNREG +6V
UNREG GND
+5V
REC C
GND
REC Y
LLA

FLEXIBLE(FP-5)

+8.5V
+5V
GND

VC-5 BOARD (SOLDER SIDE)

L805 1.5μH
R815 6.8K
R817 2.2K
R814 6.8K
R816 6.8K
R516 22K
R809 1K
R807 1K
R813 820
Q802
Q801
R808 100K
R812 22K
R811 10K
R810 2.7K
R803 5.6K
R804 8.2K
R802 22K
R801 22K
R805 10K
R783 220
R772 22K
Q771
R771 4.7K
R773 3.3K
C771 0.0068
C801 0.1
R768 5.6K
R769 5.6K
R702 6.8K
L801 1.5μH
C802 0.1

MX-2 BOARD
See page 49

VC-5 BOARD (COMPONENT SIDE)

WHITE BAL
SW801
L804
L802
L803
IC801
REF
TP820
C803 0.0022
C804 0.0022
C808 0.0022
RV802 10K
RV801 10K
C784
C794 100P
FL801
TP819
TP809
TP804
TP805
TP806
TP803
TP802
TP801
TP810
TP811
TP808
TP807
TP813

See page 49
MX-2 BOARD

I-616-641-

24

+12V
Y1-Y4
R-Y
B-Y
YH

G Ø
RB Ø
B CONT
R CONT
CLP 2
SH 1
SH 2
XDL 1
XDL 2
ID
REC ATF RF

FLEXIBLE(FP-5)

SEL 2
SEL 1
REF V

VC-6 BOARD (SOLDER SIDE)

R956
R957 1.5K
C965 0.01
R973 1K
C966 0.01
C968 3.3/16V
D951
R971 82Ω
R972 10K
C734 0.22
R958 820
C963 0.01
C964 0.01
R974 6.8K
R975 6.8K
C967 4.7/10V
C969 22/6.3V
R962 0Ω
R970 0Ω
R961 0Ω
R968 68K
R996 2.7K

See page 53
IA-1 BOARD

See page 57
ED-11 BOARD

Q954
Q953
Q952
Q955
Q951
Q956
R965 4.7K
C965 0.001
R965 22K
R963 470
R964 1K
R963 1K
R964 0.01
R966 0.01
R963 1K
R962 39K
R997 2.7K
R960 1K
R961 1K

I-616-642-

23

Q,IC	D	ADJ	TP
			955
			953
			954
	951		
954			
953			
952			
955			
951			
956			
		951	
		FL 952	
		952	

Q,IC | D | ADJ | TP

VC-6 BOARD (COM

TP955
TP953
TP954

See page
IA-1 B

See page
ED-11 BO

(UB)

FLEXIBLE(FP-5)

VD
CLP 3
AGC CONT
AGC DET
IRIS DET
+20V
+8.5V
+5V
GND
+12V

FLEXIBLE(FP-5)

FLEXIBLE(FP-5)

FLEXIBLE(FP-5)

FLEXIBLE(FP-5)

FLEXIBLE(FP-5)

C696 (UA)
TP681
C705
L683
C704

-640-

23

16 17 18 19 20 21 22 23 24 25 26 27 28 29 30 31

	Q IC	ADJ	TP
IC801			
FL801			
RV802 RV801			
820 819 809 804 805 806 803 802 801 810			TP
808 807 813			

DC-DC CONVERTER

CN1 (WHT)

1	UNREG +6V	GRY
2	UNREG GND	GRY
3	P ON	GRY
4	+20V	GRY
5	+12V	GRY
6	GND	GRY
7	+8.5V	GRY
8	+5V	GRY

LENS

IRIS

RED EE DRIVE(+)
BLK EE DRIVE(-)
ORG EE CONT(+)
YEL EE CONT(-)

FLEXIBLE(FP-5)

P ON, UNREG +6V, UNREG GND, +5V, REC C, GND, REC Y, LLA

+8.5V, +5V, GND

VC-5 BOARD (COMPONENT SIDE)

WHITE BAL, SW801, L802, L803, L804, IC801, REF, RV802 10k, RV801 10k, FL801, TP820, TP819, TP809, TP804, TP805, TP806, TP803, TP802, TP801, TP810, TP811, TP808, TP807, TP813, C803 0.0022, C804 0.0022, C805 0.0022, R784 1k, C794 100p

See page 49
MX-2 BOARD

I-616-641-

24

+12V, YL-YH, R-Y, B-Y, YH

G Ø, B Ø, RB Ø, B CONT, R CONT, CLP 2, SH 1, SH 2, XOL 2, XOL 1, ID, REC ATF RF, SEL 2, SEL 1, REF V

FLEXIBLE(FP-5)

VC-6 BOARD (SOLDER SIDE)

R956, R957, R972 1k, C965 0.01, R971 82k, D951, R958 820, C968 3.3/16V, C734 0.22, C967 0.01, R974 6.8k, R975 6.8k, C969 22/6.3V, R960 10k, C970 0.01, R962 2.7k, R961 2.7k, C963 0.01, R966 2.7k, R967 2.7k, R968 2.7k, R965 2.2k, R964 18k, R963 18k, C964 0.01, C962 39k, R969 2.7k, C967 4.7/10V, R970 10k, R973 2.7k, C966 0.01, R976 2.7k, C961 0.01, Q951, Q952, Q953, Q954, Q955, Q956

See page 53
IA-1 BOARD
See page 57
ED-11 BOARD

I-616-642-

23

Q,IC	D	ADJ	TP
			955
			953
			954
	951		
954			
953			
952			
955			
951			
956			
		951	
		952	
		FL 952	

(JB)

VC-6 BOARD (COMPONENT SIDE)

TP955, TP954, TP953, CN952, CN951, C954, C955, C956, C957, C960, C961, L951, L952, L953, DL951, FL952, TP951, TP952

See page 53
IA-1 BOARD
See page 57
ED-11 BOARD

I-616-642-

23

CN952: +5V, +8.5V, GND, +12V, +20V, P ON, UNREG GND, UNREG +6V

CN951(WHT): EE CONT(-), EE CONT(+), EE DRIVE(-), EE DRIVE(+)

P ON, UNREG +6V, UNREG GND, +5V, REC C, GND, REC Y, LLA, GND, +5V, +8.5V

IRIS DET, AGC DET, AGC CONT, CLP 3, VD

YL -YH, R-Y, B-Y, YH, L ALT, BLK, SYNC

BF, +20V, +8.5V, +5V, GND, +12V

FLEXIBLE(FP-5)

VIDEO, AUDIO	VIDEO, AUDIO

MD-10 BOARD (SYSCON,SERVO)

IC101 (36)

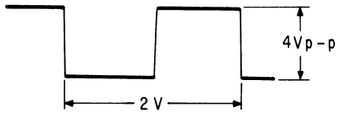

IC101 (39)

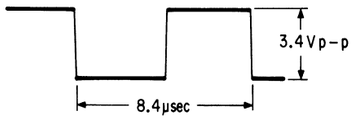

SV-16 BOARD (2)

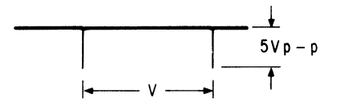

SV-16 BOARD (7)

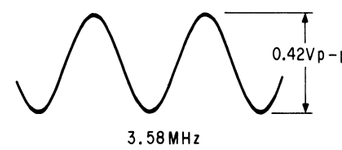

SV-16 BOARD (12)

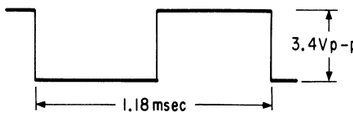

SV-16 BOARD (21)

MD-10 BOARD (VIDEO,AUDIO)

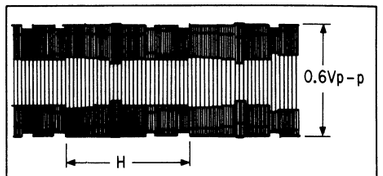

YM-2 BOARD (1)

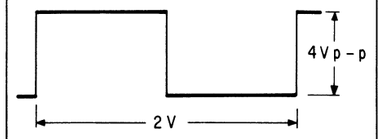

YM-2 BOARD (5)

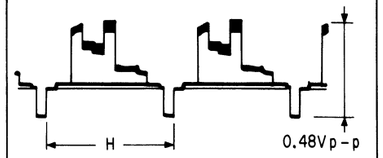

YM-2 BOARD (13), (15)

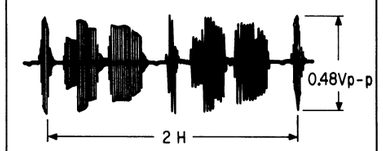

RP-29 BOARD (3)

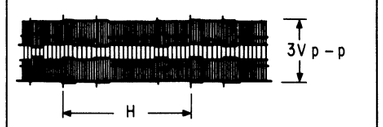

RP-29 BOARD (24), (19)

MD-10 BOARD (SYSCON,SERVO)

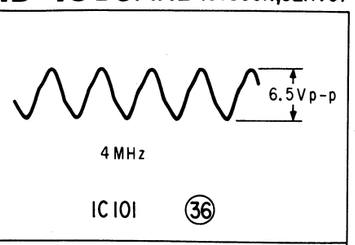

MD-10 BOARD (VIDEO,AUDIO)

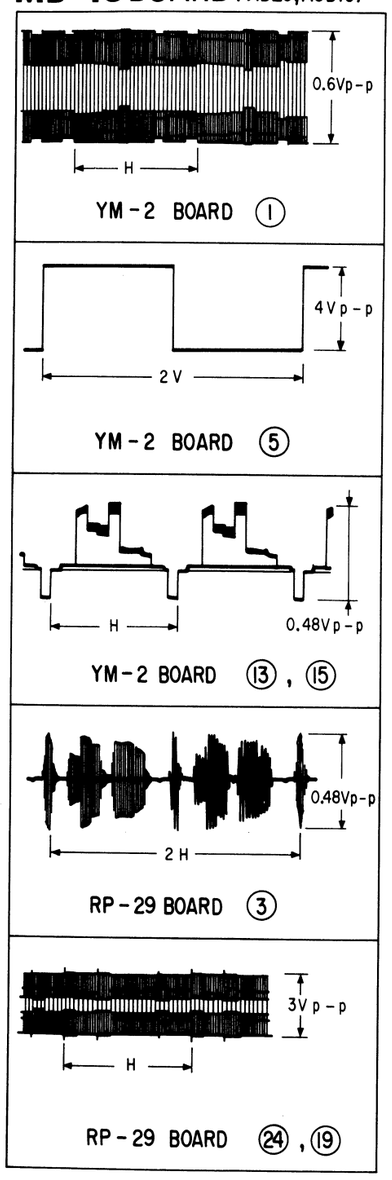

- Caution to be exercised when replacing chip components Do not reuse the removed components but use new components.
  Caution should be taken as the negative side of the tantalum capacitor is weak toward heat.
- All capacitors which resistance pressure 50V or less are not indicated except for chemicals and tantalums. The unit is all μF (p is pF).
- All resistors are in ohms, 1/10W in chip resistance; 1/32W in printing resistance.
  kΩ =1000Ω and MΩ =1000kΩ
- All variable and adjustable resistors have characteristics curve B, which definition is omitted.
- ▭ : panel designation.
- ▭ : adjustment designation.
- ▬ : B+ line.
- Measuring conditions of voltage value and waveform
  (1) The subject is color bar of pattern box.
  (2) The voltage value is a reference value between the grounding.
  (The tester used is the digital multimeter DC10MΩ)
  (3) The voltage value are all in the recording mode of operation.

- **Signal path**
  - ➡ :REC Y SIGNAL
  - ➡ :REC Y & CHROMA SIGNAL
  - ➡ :REC CHROMA SIGNAL

MD-10 (VIDEO, AUDIO) SCHEMATIC DIAGRAM

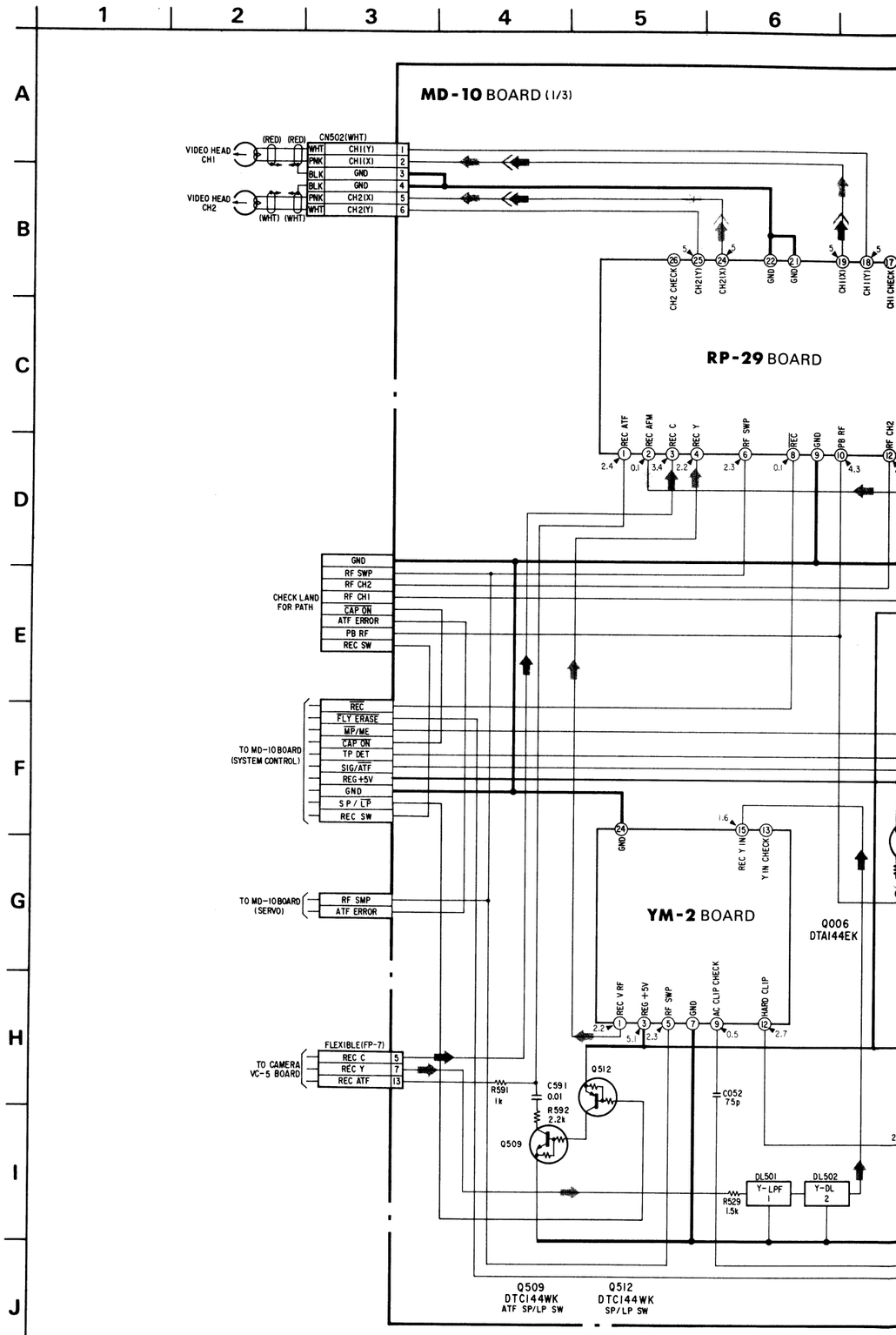

xercised when replacing chip components
the removed components but use new

e taken as the negative side of the tantalum
k toward heat.
ich resistance pressure 50V or less are not
for chemicals and tantalums. The unit is all

ohms, 1/10W in chip resistance; 1/32W in
e.
MΩ =1000kΩ
adjustable resistors have characteristics
efinition is omitted.
signation.
nt designation.

ions of voltage value and waveform
is color bar of pattern box.
value is a reference value between the

sed is the digital multimeter DC10MΩ)
value are all in the recording mode of

Y SIGNAL
Y & CHROMA SIGNAL
CHROMA SIGNAL
AUDIO SIGNAL

MD-10 (VIDEO, AUDIO) SCHEMATIC DIAGRAM

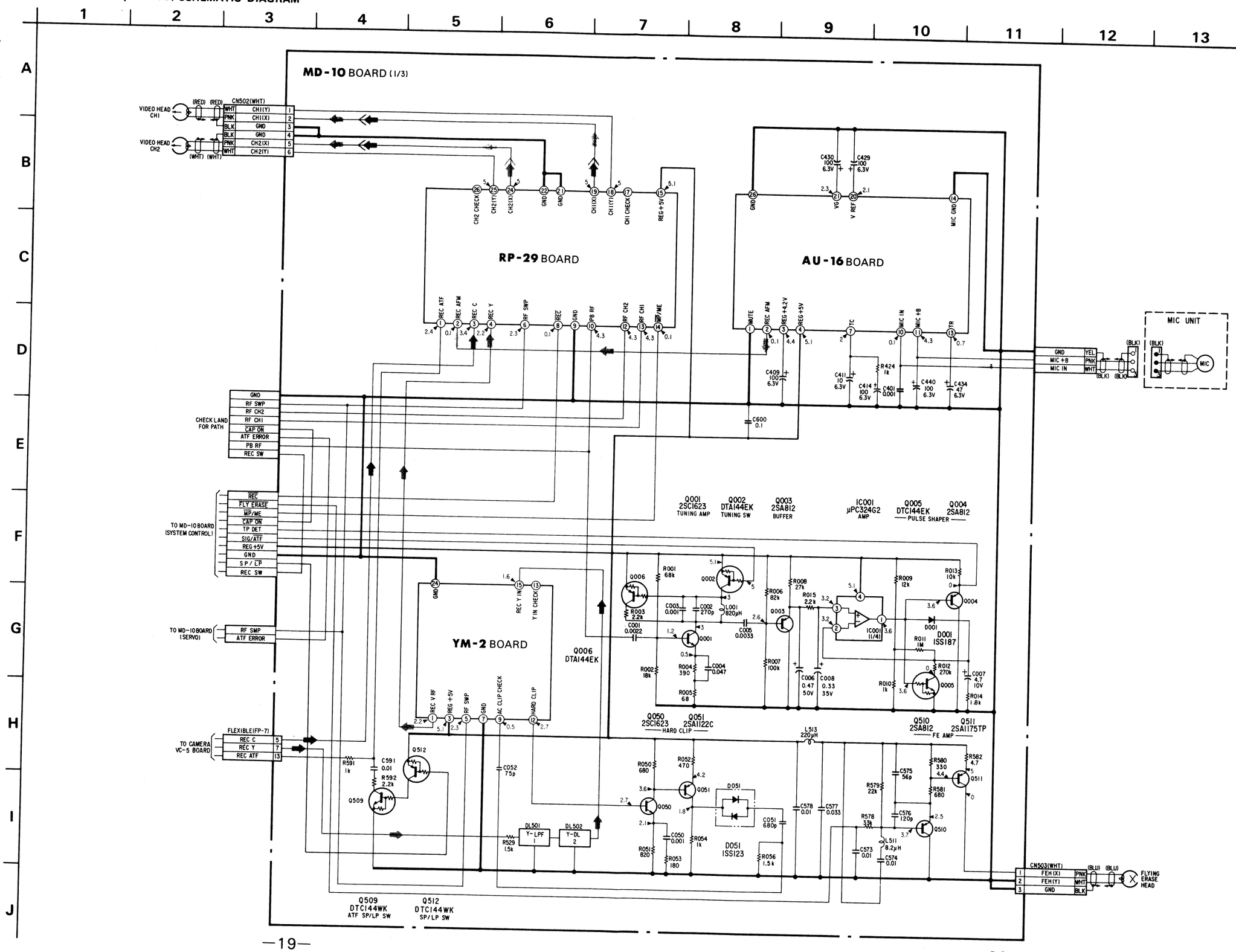

MD-10 (VIDEO, AUDIO), CC-3 (MODE SWITCH, DEW SENSOR DETECTION), ES-11 (TAPE END SENSOR), FH-3 (POWER SUPPLY), FP-8 (TAPE SELECT, CASSETTE-IN SWITCH), FP-14 (LOADING MOTOR),

- ⊗ : mark is slew hole.
- ○— : lead wire attached to the component side.
- ●— : lead wire attached to the pattern side.
- ▒ : pattern from the side which enables seeing.
- ▒ : pattern of the rear side.
- ▒ : B+ pattern.
- ▨ : printing resistance.
- The voltage value is all recording mode of operation.
- Digital transistor (MD-10 : Q002, 005, 006, 102, 111, 112, 113, 114, 118, 120, 121, 128, 131, 201, 216, 217, 509, 512 transistor with resistors.
  Refer to the MD-10 board schematic diagram for digital transistor.

Note

Soldering side: Parts on the soldering side being seen from the soldering are stated.

Component side: Parts on the component side being seen from the component are stated.

Regarding color indication of patterns

* Patterns being seen in the state from the surface side are indicated in gray pattern and red pattern (B+ pattern).

* Pattern being seen in the state of the rear surface side is indicated in green pattern.

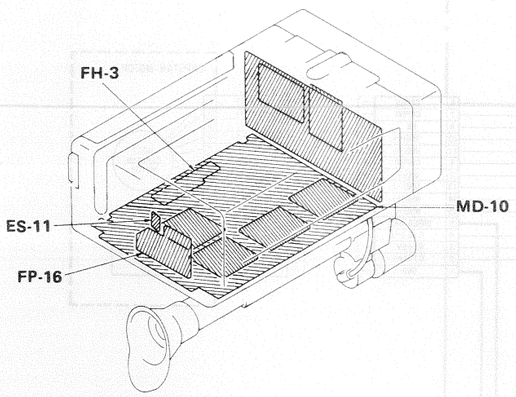

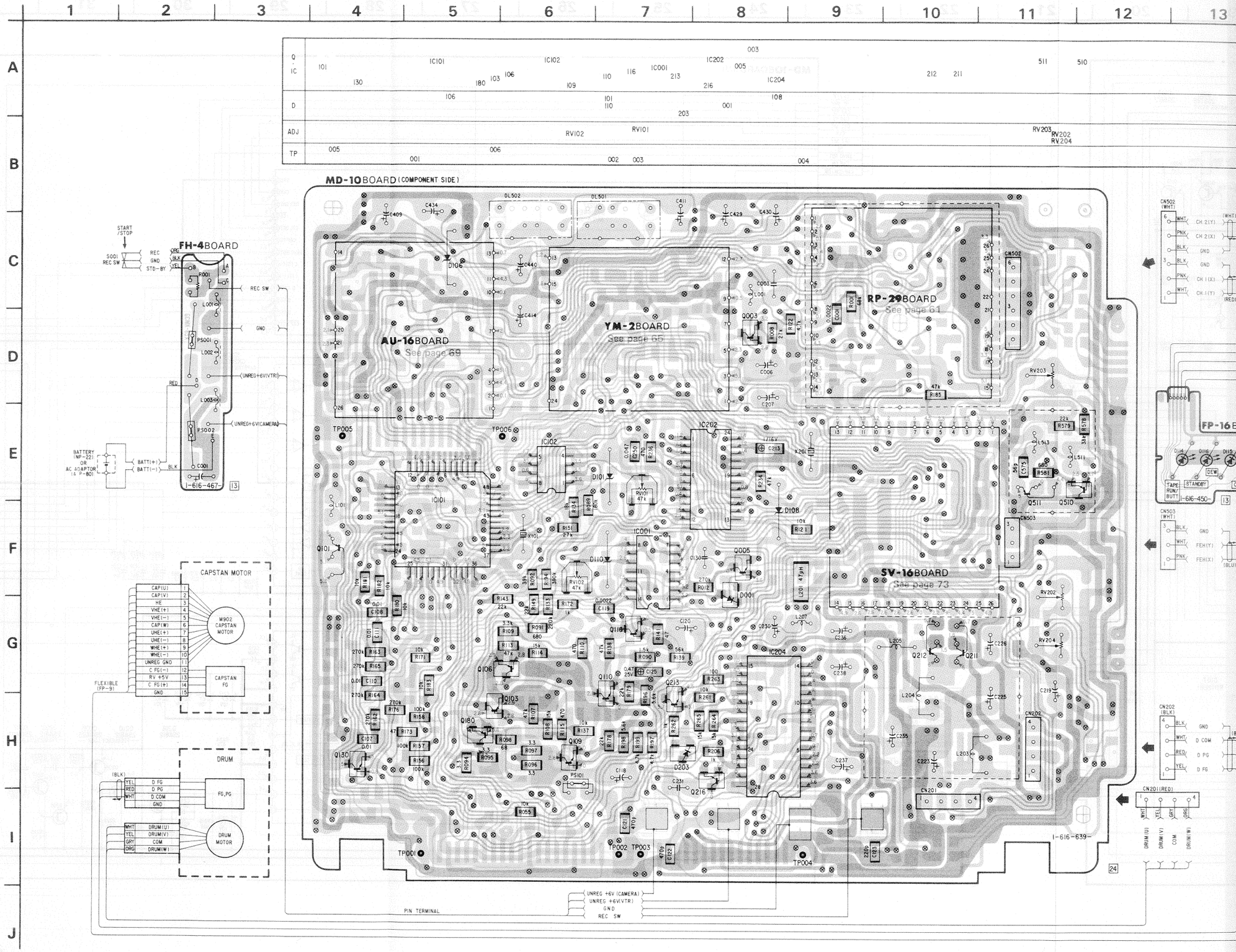

MD-10 (VIDEO, AUDIO), CC-3 (MODE SWITCH, DEW SENSOR DETECTION), ES-11 (TAPE END SENSOR), FH-3 (POWER SUPPLY), FP-8 (TAPE SELECT, CASSETTE-IN SWITCH), FP-14 (LOADING MOTOR),

- ⊗ : mark is slew hole.
- ○— : lead wire attached to the component side.
- ●— : lead wire attached to the pattern side.
- ▒ : pattern from the side which enables seeing.
- ▒ : pattern of the rear side.
- ▒ : B+ pattern.
- ▨ : printing resistance.
- The voltage value is all recording mode of operation.
- Digital transistor (MD-10 : Q002, 005, 006, 102, 111, 112, 113, 114, 118, 120, 121, 128, 131, 201, 216, 217, 509, 512 transistor with resistors.
  Refer to the MD-10 board schematic diagram for digital transistor.

Note

Soldering side: Parts on the soldering side being seen from the soldering are stated.

Component side: Parts on the component side being seen from the component are stated.

Regarding color indication of patterns

* Patterns being seen in the state from the surface side are indicated in gray pattern and red pattern (B+ pattern).

* Pattern being seen in the state of the rear surface side is indicated in green pattern.

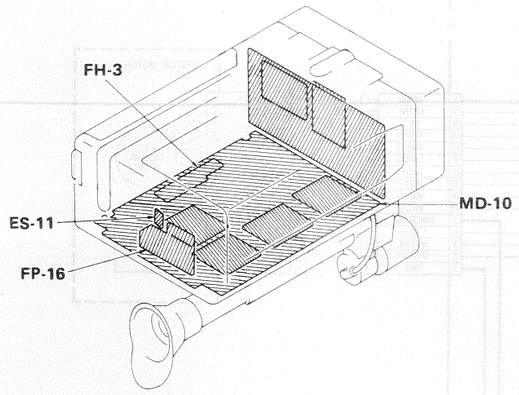

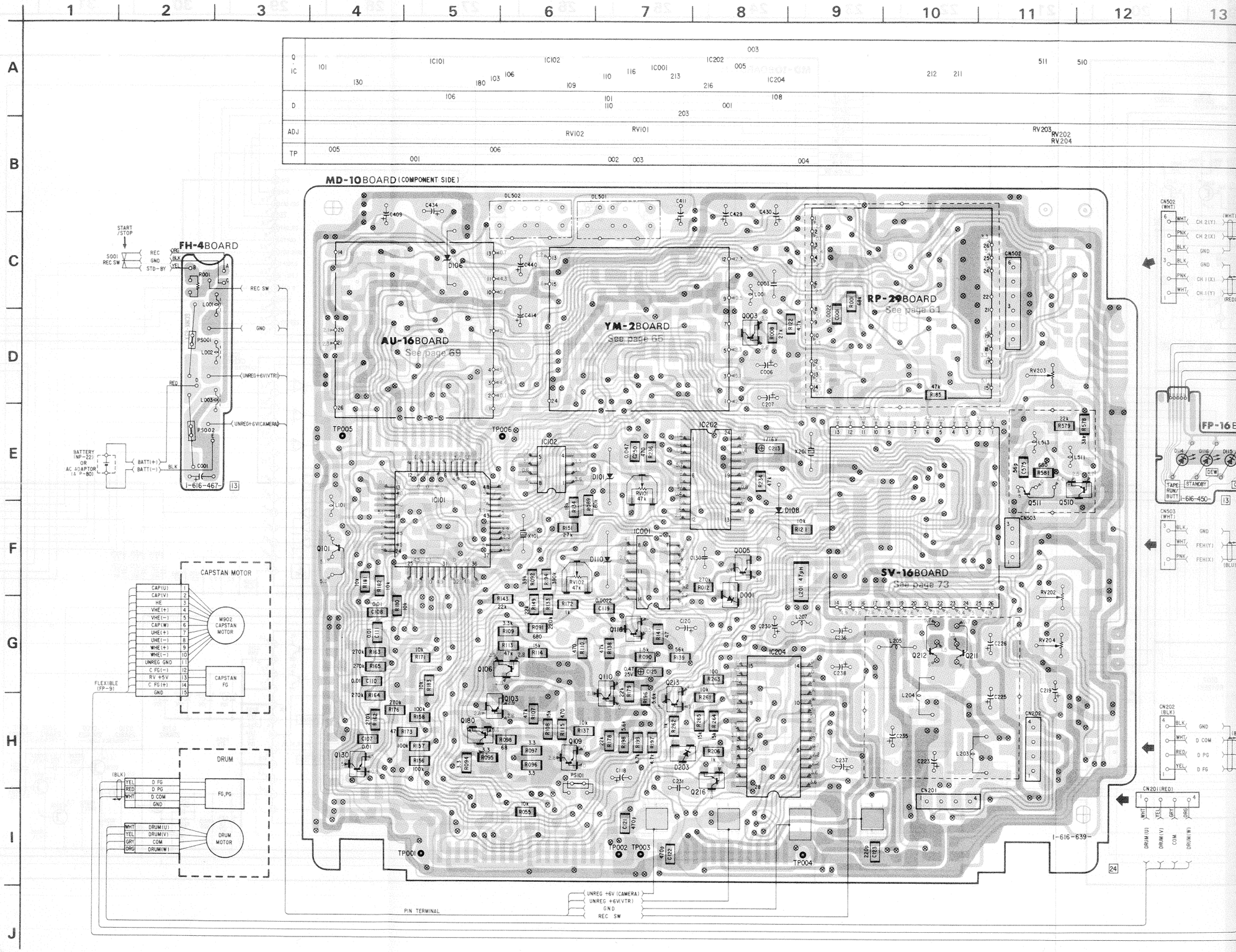

SELECT, CASSETTE-IN SWITCH), FP-14 (LOADING MOTOR), FP-16 (LED) PRINTED WIRING BOARDS

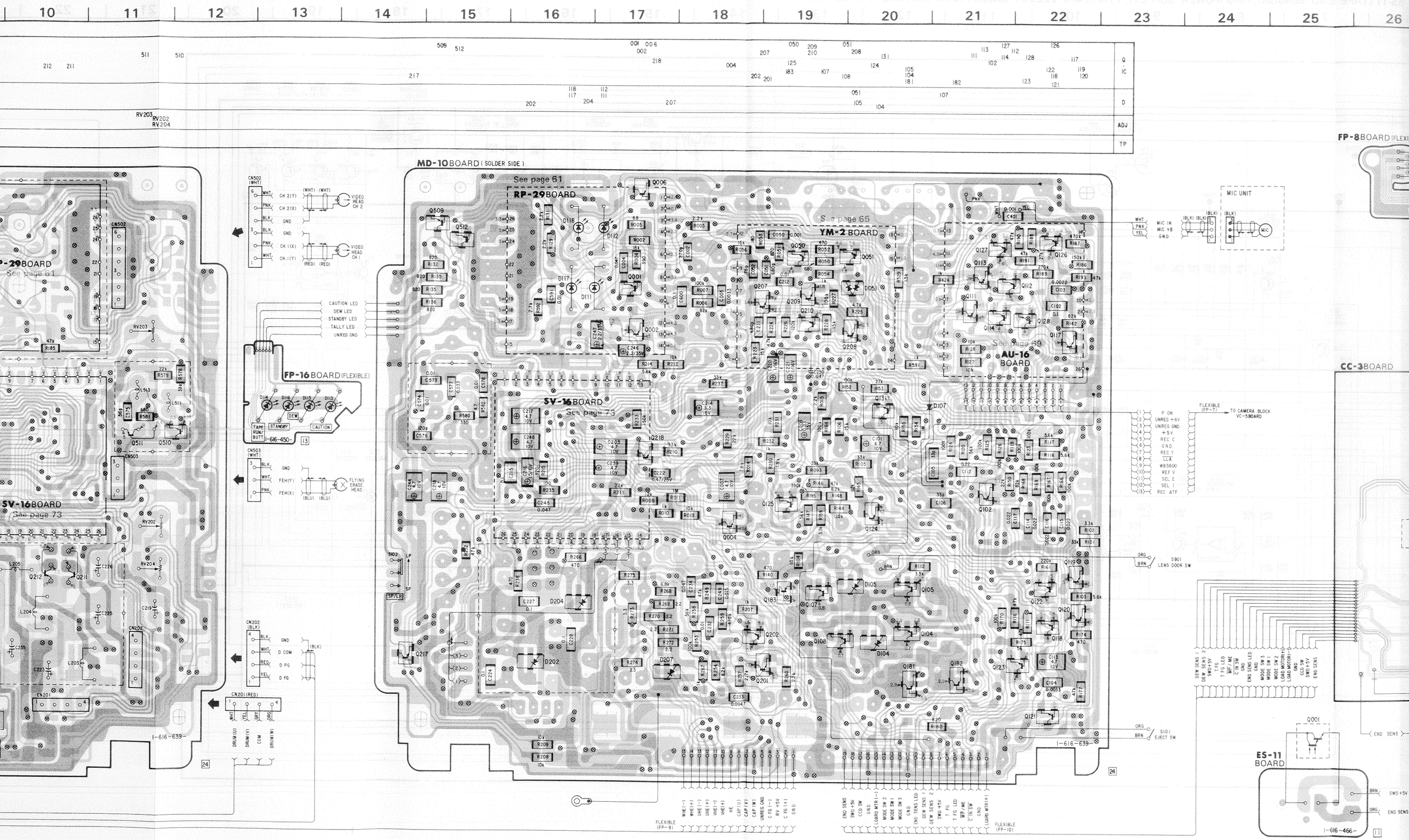

RDS

16 17 18 19 20 21 22 23 24 25 26 27 28 29 30 31

Q : IC
D
ADJ
TP

ER SIDE)

See page 61

RP-29 BOARD

See page 65

YM-2 BOARD

AU-16 BOARD

See page 79

SV-16 BOARD

See page 73

MIC UNIT

WHT PNK YEL
MIC IN
MIC +B
GND

FP-8 BOARD (FLEXIBLE)

1-616-446-

S001 CASSETTE IN SW
TAPE SELECT SW
D002
D001

END SENS LED
GND
SWD+5V
T FG
T FG LED
MP/ME
C IN SW

CC-3 BOARD

DEW SENSOR
MODE SW

1-616-614-

P ON
UNREG +6V
UNREG GND
+5V
REC C
GND
REC Y
LLA
WB5800
REF V
SEL 2
SEL 1
REC ATF

FLEXIBLE (FP-7)
TO CAMERA BLOCK VC-5 BOARD

ORG BRN
S901 LENS DOOR SW

ORG BRN
S101 EJECT SW

1-616-639-

DEW SENS 1
DEW SENS 2
SWD +5V
T FG
T FG LED
WP/ME
C IN SW
GND
END SENS LED
MODE SW 3
MODE SW 1
MODE SW 2
LOAD MOTOR(+)
LOAD MOTOR(-)
GND
CCD SW
SWD +5V
END SENS

Q001
ES-11 BOARD
1-616-466-

END SENS
RV001
SWD+5V
CCD SW
GND
S902 CCD SW

BRN WHT BLK

FP-14 BOARD (FLEXIBLE)
M901 LOADING MOTOR
C001
LOAD MOTOR(+)
LOAD MOTOR(-)
1-616-449-

FLEXIBLE (FP-9)
WHE(-) WHE(+) UHE(-) UHE(+) VHE(-) VHE(+) HE CAP(U) CAP(V) CAP(W) UNREG GND C FG(-) RV +5V C FG(+) GND

END SENS SWD+5V CCD SW GND LOAD MTR(-) MODE SW 2 MODE SW 1 MODE SW 3 GND END SENS LED DEW SENS 1 DEW SENS 2 SWD +5V T FG T FG LED WP/ME C IN SW GND LOAD MTR(+)
FLEXIBLE (FP-10)

SERVO, SYSTEM CONTROL

MD-10 (SERVO, SYSTEM CONTROL), CC-3 (MODE SWITCH, DEW SENSOR DETECTION), ES-11 (TAPE END SENSOR), FH-3 (POWER SUPPLY), FP-8 (TAPE SELECT, CASSETTE-IN SWITCH), FP-14 (LOADING MOTOR), FP-16 (LED) SCHEMATIC DIAGRAMS

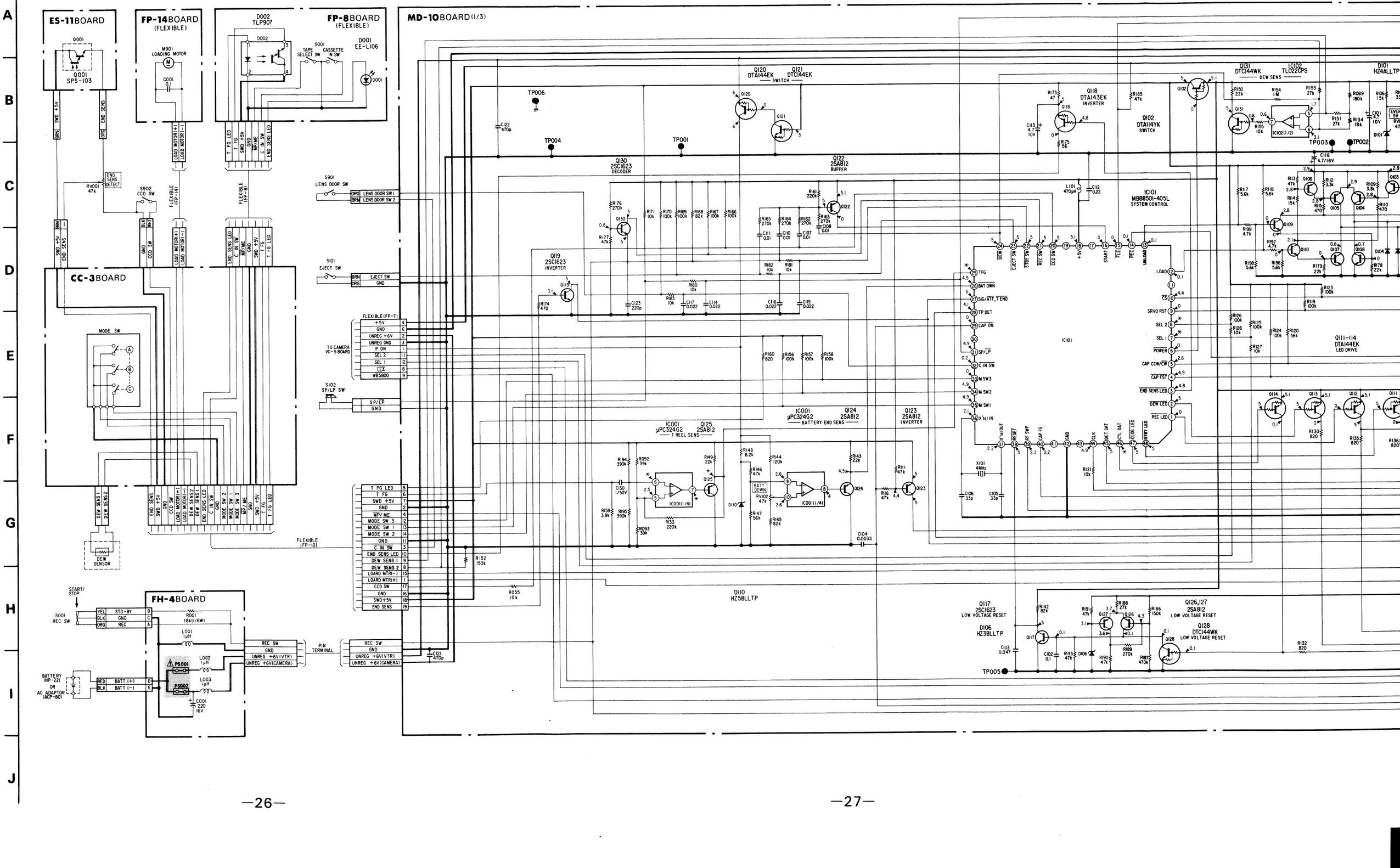

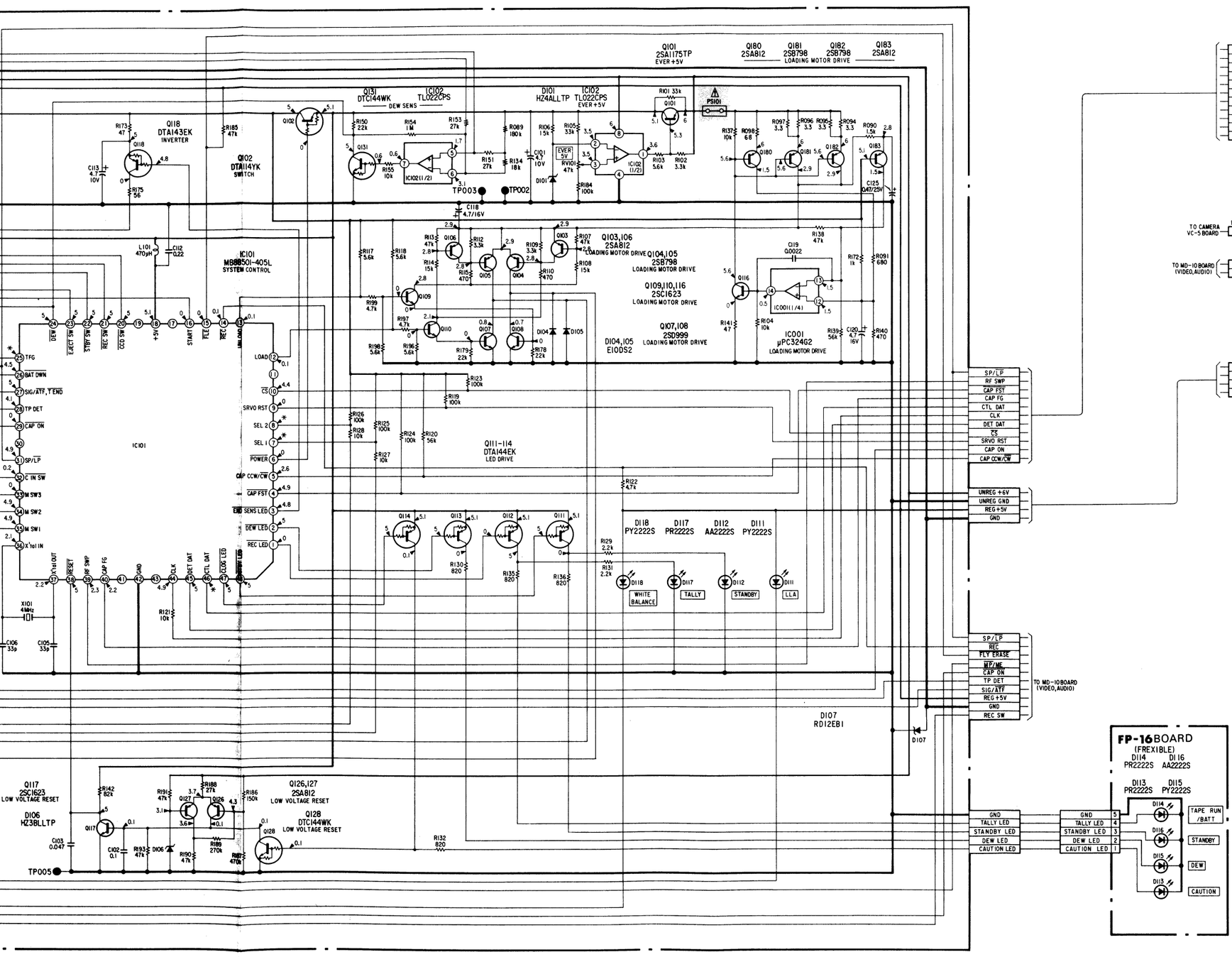
Q101 2SA1175TP EVER +5V
Q180 2SA812
Q181 2SB798
Q182 2SB798
Q183 2SA812
LOADING MOTOR DRIVE
Q118 DTA143EK INVERTER
Q102 DTA114YK SWITCH
Q131 DTC144WK DEW SENS
IC102 TL022CPS
D101 HZ4ALLTP
PS101
TP003
TP002
IC101 M88501-405L SYSTEM CONTROL
Q103,106 2SA812 LOADING MOTOR DRIVE
Q104,105 2SB798 LOADING MOTOR DRIVE
Q109,110,116 2SC1623 LOADING MOTOR DRIVE
Q107,108 2SD999 LOADING MOTOR DRIVE
IC001 µPC324G2 LOADING MOTOR DRIVE
D104,105 E10DS2
Q111-114 DTA144EK LED DRIVE
D118 PY2222S
D117 PR2222S
D112 AA2222S
D111 PY2222S
WHITE BALANCE
TALLY
STANDBY
LLA
X101 4MHz
Q117 2SC1623 LOW VOLTAGE RESET
D106 HZ3BLLTP
Q126,127 2SA812 LOW VOLTAGE RESET
Q128 DTC144WK LOW VOLTAGE RESET
TP005
D107 RD12EBI
SP/LP
RF SWP
CAP FST
CAP FG
CTL DAT
CLK
DET DAT
CS
SRVO RST
CAP ON
CAP CCW/CW
UNREG +6V
UNREG GND
REG +5V
GND
REC
PLY ERASE
MT/ME
TP DET
SIG/ATF
REC SW
TALLY LED
STANDBY LED
DEW LED
CAUTION LED
TO MD-10BOARD (VIDEO,AUDIO)
FP-16BOARD (FREXIBLE)
D114 PR2222S
D116 AA2222S
D113 PR2222S
D115 PY2222S
TAPE RUN /BATT
STANDBY
DEW
CAUTION

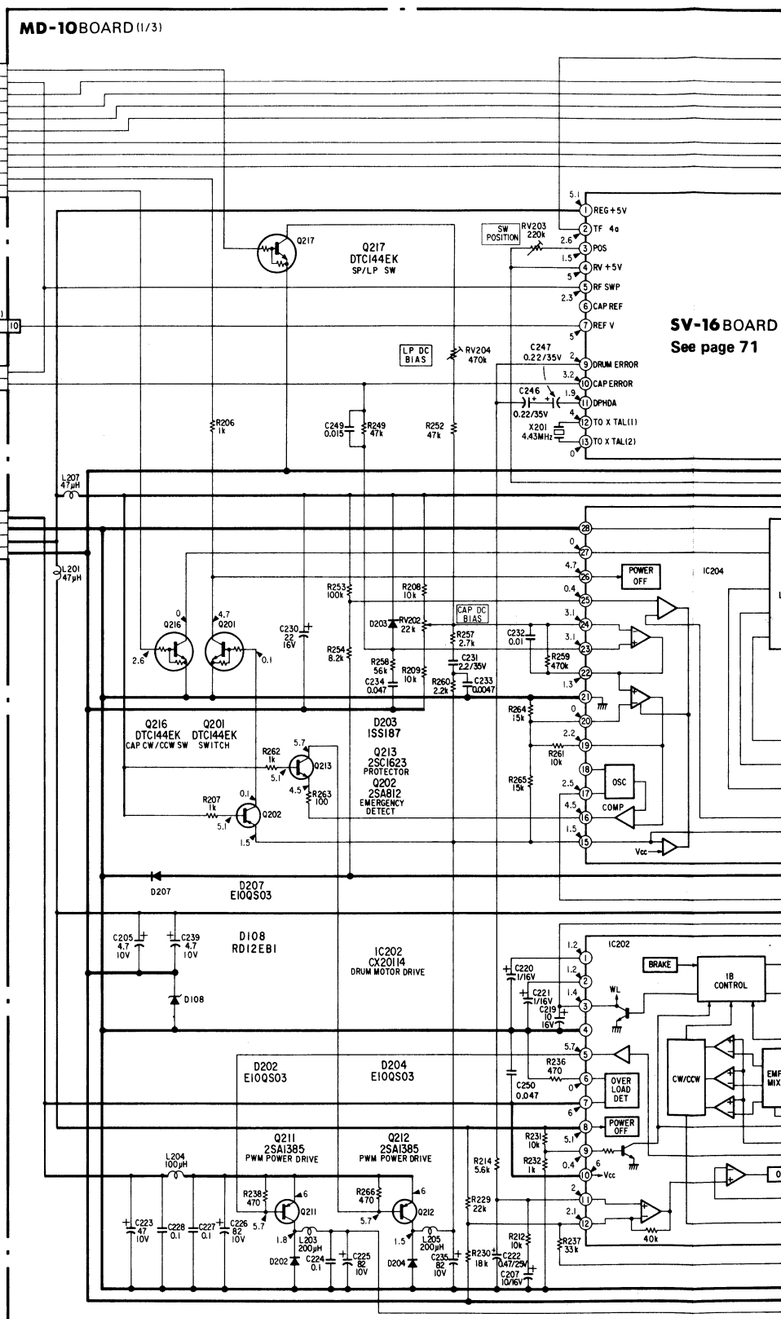
MD-10BOARD (1/3)
SV-16BOARD
See page 71
TO CAMERA VC-5 BOARD
FLEXIBLE(FP-7)
TO MD-10BOARD (VIDEO,AUDIO)
Q217 DTC144EK SP/LP SW
Q216 DTC144EK CAP CW/CCW SW
Q201 DTC144EK SWITCH
Q213 2SC1623 PROTECTOR
Q202 2SA812 EMERGENCY DETECT
D203 1SS187
D207 E10QS03
D108 RD12EBI
IC202 CX20114 DRUM MOTOR DRIVE
D202 E10QS03
D204 E10QS03
Q211 2SA1385 PWM POWER DRIVE
Q212 2SA1385 PWM POWER DRIVE
IC204
BRAKE
1B CONTROL
CW/CCW
OVER LOAD DET
POWER OFF
OSC
COMP
Vcc
LP DC BIAS
CAP DC BIAS
SW POSITION
REG +5V
TF 4o
POS
RV +5V
RF SWP
CAP REF
REF V
DRUM ERROR
CAP ERROR
DPHDA
TO X TAL(1)
TO X TAL(2)
X201 4.43MHz

19 20 21 22 23 24 25 26 27 28 29 30 31 32 33 34 35

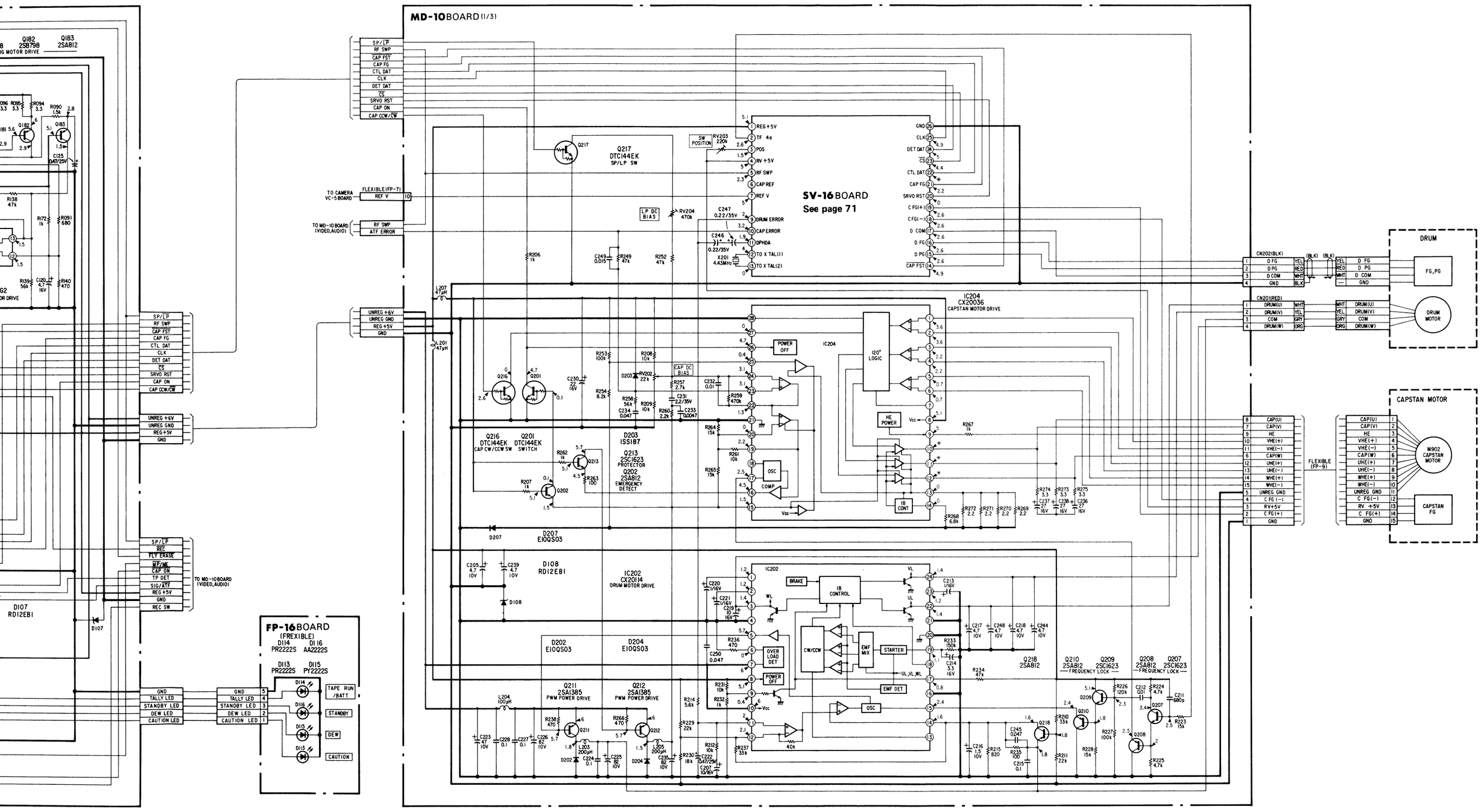

- Caution to be exercised when replacing chip components Do not reuse the removed components but use new components.
  Caution should be taken as the negative side of the tantalum capacitor is weak toward heat.
- All capacitors which resistance pressure 50V or less are not indicated except for chemicals and tantalums. The unit is all μF (p is pF).
- All resistors are in ohms, 1/10W in chip resistance; 1/32W in printing resistance.
  kΩ =1000Ω and MΩ =1000kΩ
- All variable and adjustable resistors have characteristics curve B, which definition is omitted.

Note (SCHEMATIC DIAGRAM) :

- ▭ : panel designation.
- ▭ : adjustment designation.
- ▬ : B+ line.
- Measuring conditions of voltage value and waveform
  (1) The subject is color bar of pattern box.
  (2) The voltage value is a reference value between the grounding.
  (The tester used is the digital multimeter DC10MΩ)
  (3) The voltage value are all in the recording mode of operation.

Note: The components identified by shading and mark ⚠ are critical for safety. Replace only with part number specified.

Note (PRINTED WIRING BOARD) :

- ⊗ : mark is slew hole.
- ○— : lead wire attached to the component side.
- ●— : lead wire attached to the pattern side.
- ▩ : pattern from the side which enables seeing.
- ▩ : pattern of the rear side.
- ▩ : B+ pattern.
- ▨ : printing resistance.
- The voltage value is all recording mode of operation.
- Digital transistor (MD-10 : Q002, 005, 006, 102, 111, 112, 113, 114, 118, 120, 121, 128, 131, 201, 216, 217, 509, 512 transistor with resistors.
  Refer to the MD-10 board schematic diagram for digital transistor.

Note
Soldering side: Parts on the soldering side being seen from the soldering are stated.
Component side: Parts on the component side being seen from the component are stated.

Regarding color indication of patterns
* Patterns being seen in the state from the surface side are indicated in gray pattern and red pattern (B+ pattern).
* Pattern being seen in the state of the rear surface side is indicated in green pattern.

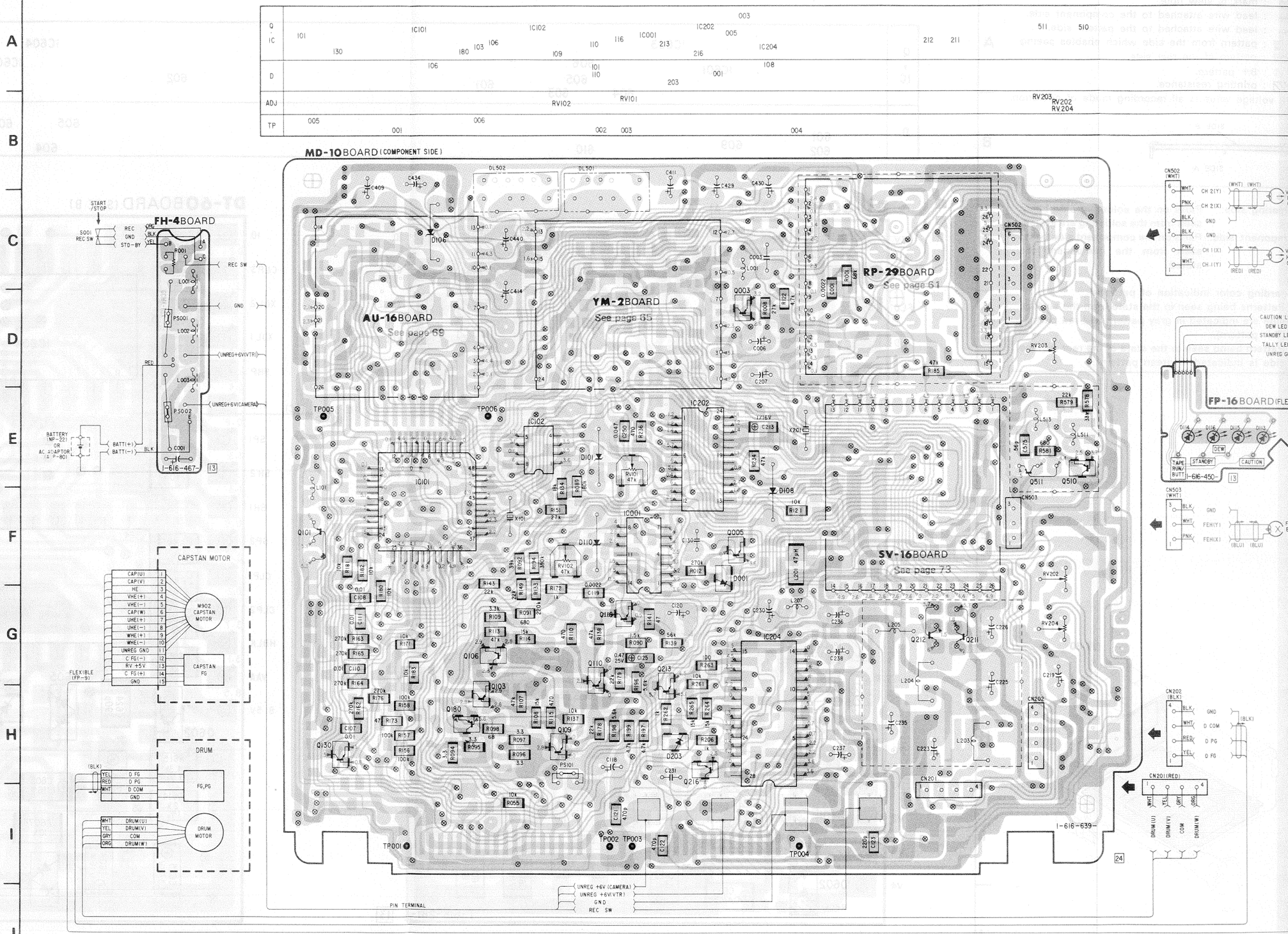

ELECT, CASSETTE-IN SWITCH), FP-14 (LOADING MOTOR), FP-16 (LED) PRINTED WIRING BOARDS

11 12 13 14 15 16 17 18 19 20 21 22 23 24 25 26 27

Q IC
D
ADJ
TP

RV203 RV202 RV204

MD-10 BOARD (SOLDER SIDE)

See page 61

RP-29 BOARD

See page 65

YM-2 BOARD

See page 69

AU-16 BOARD

SV-16 BOARD

See page 73

FP-16 BOARD (FLEXIBLE)

CAUTION LED
DEW LED
STANDBY LED
TALLY LED
UNREG GND

CN502 (WHT)
WHT CH 2(Y)
PNK CH 2(X)
BLK GND
BLK GND
PNK CH 1(X)
WHT CH 1(Y)
(WHT) (WHT) VIDEO HEAD CH 2
(RED) (RED) VIDEO HEAD CH 1

CN503 (WHT)
BLK GND
WHT FEH(Y)
PNK FEH(X)
(BLU) (BLU) FLYING ERASE HEAD

CN202 (BLK)
BLK GND
WHT D COM
RED D PG
YEL D FG
(BLK)

CN201 (RED)
WHT DRUM(U)
YEL DRUM(V)
GRY COM
ORG DRUM(W)

I-616-639-

I-616-450-

FP-8 BOARD (FLEXIBLE)

I-616-446-

MIC UNIT
WHT MIC IN
PNK MIC +B
YEL GND
(BLK) (BLK) (BLK) (BLK) MIC

SOOI CASSETTE IN SW
TAPE SELECT SW

CC-3 BOARD

DEW SENSOR

FLEXIBLE (FP-7) TO CAMERA BLOCK VC-5 BOARD
P ON
UNREG +6V
UNREG GND
+5V
REC C
GND
REC Y
LLA
WB5800
REF V
SEL 2
SEL 1
REC ATF

S901 LENS DOOR SW
ORG BRN

S101 EJECT SW
ORG BRN

DEW SENS 1
DEW SENS 2
SWD+5V
T FG
T FG LED
WP/ME
C IN SW
GND
END SENS LED
MODE SW 3
MODE SW 2
MODE SW 1
LOAD MOTOR(+)
LOAD MOTOR(-)
CCD SW
SWD+5V
END SENS

Q001
END SENS
RV001
SWD+5V
CCD SW
GND
S902 CCD SW
BRN
WHT
BLK

ES-11 BOARD
BRN SWD+5V
ORG END SENS
I-616-466-

FLEXIBLE (FP-9)
WHE(-)
WHE(+)
UHE(-)
VHE(+)
VHE(-)
HE
CAP(U)
CAP(V)
CAP(W)
UNREG GND
C.FG(-)
RV +5V
C.FG(+)
GND

FLEXIBLE (FP-10)
END SENS
SWD+5V
CCD SW
GND
LOADG MTR(-)
MODE SW 2
MODE SW1
MODE SW3
GND
END SENS LED
DEW SENS 1
DEW SENS 2
SWD+5V
T FG
T FG LED
WP/ME
C IN SW
GND
LOADG MTR(+)

16 17 18 19 20 21 22 23 24 25 26 27 28 29 30 31

Q IC
D
ADJ
TP

page 61

29 BOARD

See page 65

YM-2 BOARD

See page 69

AU-16 BOARD

SV-16 BOARD

See page 73

MIC UNIT

WHT PNK YEL MIC IN MIC +B GND (BLK) (BLK) (BLK) (BLK) MIC

FP-8 BOARD (FLEXIBLE)

1-616-446- 13

S001 CASSETTE IN SW

TAPE SELECT SW

D002

D001

END SENS LED GND SWD+5V T FG T FG LED MP/ME C IN SW

CC-3 BOARD

DEW SENSOR

MODE SW

1-616-614- 13

P ON UNREG +5V UNREG GND +5V REC C GND REC Y CLK WB5800 REF V SEL 2 SEL 1 REC ATF

FLEXIBLE (FP-7) → TO CAMERA BLOCK VC-5 BOARD

S901 LENS DOOR SW

S101 EJECT SW

1-616-639- 24

DEW SENS 1 DEW SENS 2 SWD+5V T FG T FG LED MP/ME C IN SW GND END SENS LED GND MODE SW 3 MODE SW 1 MODE SW 2 LOAD MOTOR(+) LOAD MOTOR(-) GND CCD SW SWD+5V END SENS

FLEXIBLE (FP-9)

WHE(-) WHE(+) UHE(-) UHE(+) VHE(+) HE CAP(U) CAP(V) CAP(W) UNREG GND C FG (-) RV +5V C FG (+) GND

END SENS SWD+5V CCD SW GND LOAD MTR(-) MODE SW 2 MODE SW 1 MODE SW 3 GND END SENS LED DEW SENS 1 DEW SENS 2 SWD+5V T FG T FG LED MP/ME C IN SW GND LOAD MTR(+)

FLEXIBLE (FP-10)

ES-11 BOARD

Q001

1-616-466- 11

BRN SWD+5V ORG END SENS

END SENS RV001

BRN WHT BLK SWD+5V CCD SW GND

S902 CCD SW

M901 LOADING MOTOR C001

LOAD MOTOR(+) LOAD MOTOR(-)

FP-14 BOARD (FLEXIBLE)

1-616-449- 12

FH-3 ES-11 FP-16 MD-10

- Caution to be exercised when replacing chip components
  Do not reuse the removed components but use new components.
  Caution should be taken as the negative side of the tantalum capacitor is weak toward heat.
- All capacitors which resistance pressure 50V or less are not indicated except for chemicals and tantalums. The unit is all μF (p is pF).
- All resistors are in ohms, 1/10W in chip resistance; 1/32W in printing resistance.
  kΩ =1000Ω and MΩ =1000kΩ
- All variable and adjustable resistors have characteristics curve B, which definition is omitted.
- ▭ : printing resistor.
- ▭ : panel designation.
- ▭ : adjustment designation.
- ▬ : B+ line.
- Measuring conditions of voltage value and waveform
  (1) The subject is color bar of pattern box.
  (2) The voltage value is a reference value between the grounding.
  (The tester used is the digital multimeter DC10MΩ)
  (3) The voltage value are all in the recording mode of operation.

DT-60 (CCD DRIVE, TIMING GENERATOR) SCHEMATIC DIAGRAM

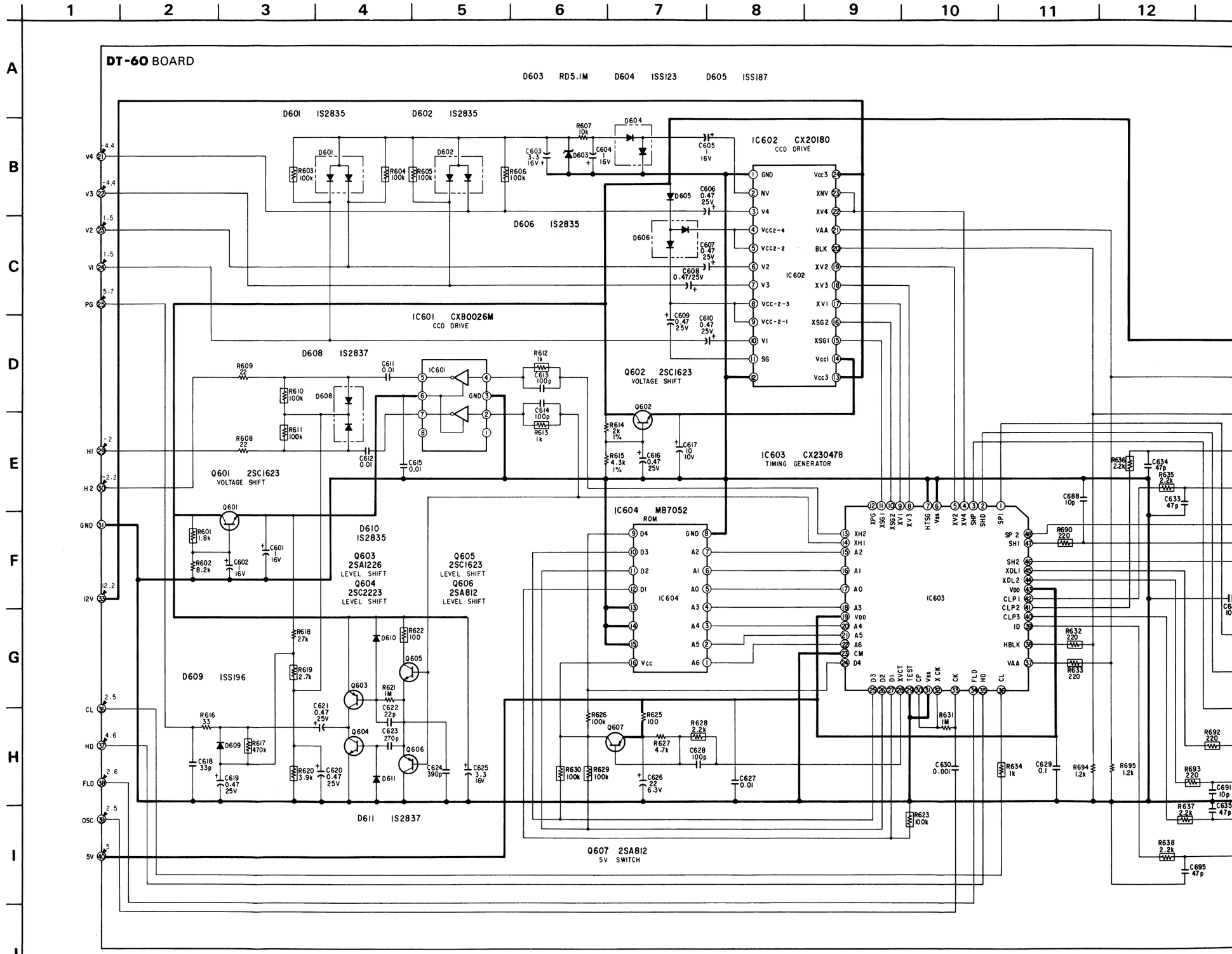

DT-60 (CCD DRIVE, TIMING GENERATOR) PRINTED WIRING BOARD

- ⊗ : mark is slew hole.
- ○— : lead wire attached to the component side.
- ●— : lead wire attached to the pattern side.
- ▬ : pattern from the side which enables seeing.
- ▬ : pattern of the rear side.
- ▬ : B+ pattern.
- ▨ : printing resistance.
- The voltage value is all recording mode of operation.

Note

Soldering side: Parts on the soldering side being seen from the soldering are stated.

Component side: Parts on the component side being seen from the component are stated.

Regarding color indication of patterns

* Patterns being seen in the state from the surface side are indicated in gray pattern and red pattern (B+ pattern).
* Pattern being seen in the state of the rear surface side is indicated in green pattern.

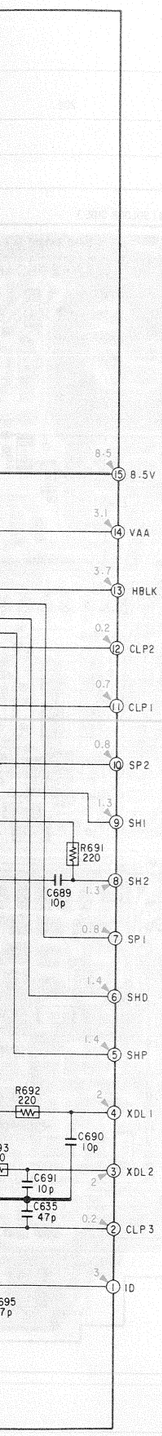

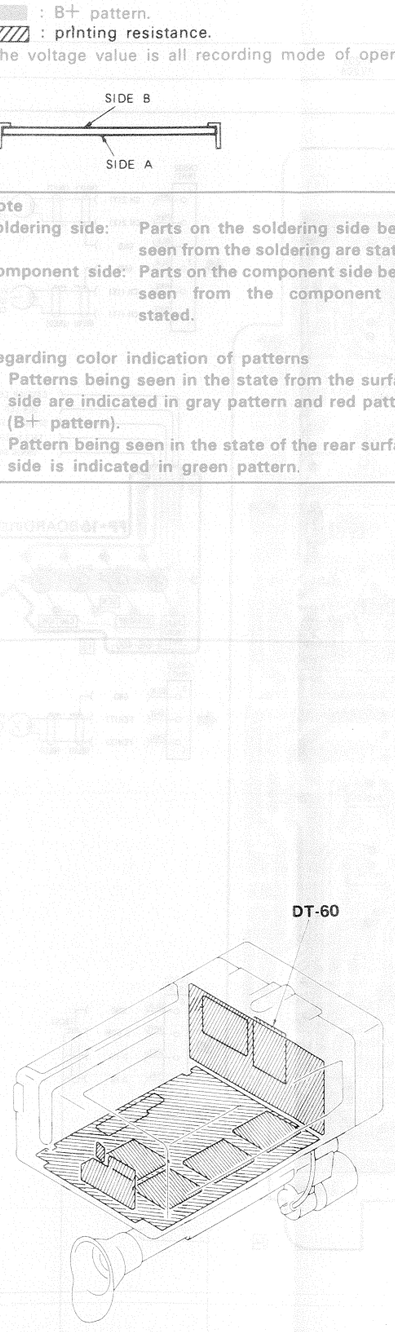

	1	2	3	4	5	6	7	8	9	10	11
Q, IC		IC603								IC604	
			IC601	606						IC602	
				605							
				604	603	601		602			
D		601								605	606
		602	609		610					604	611
											603

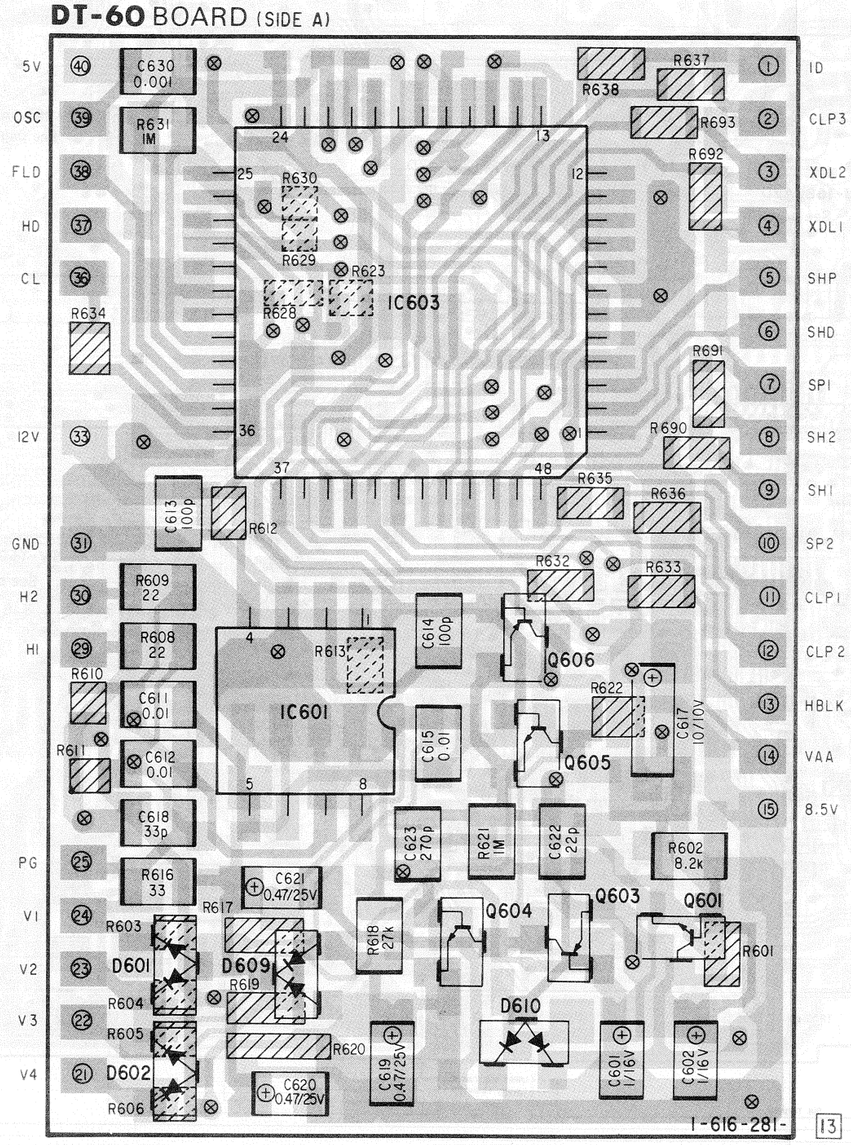

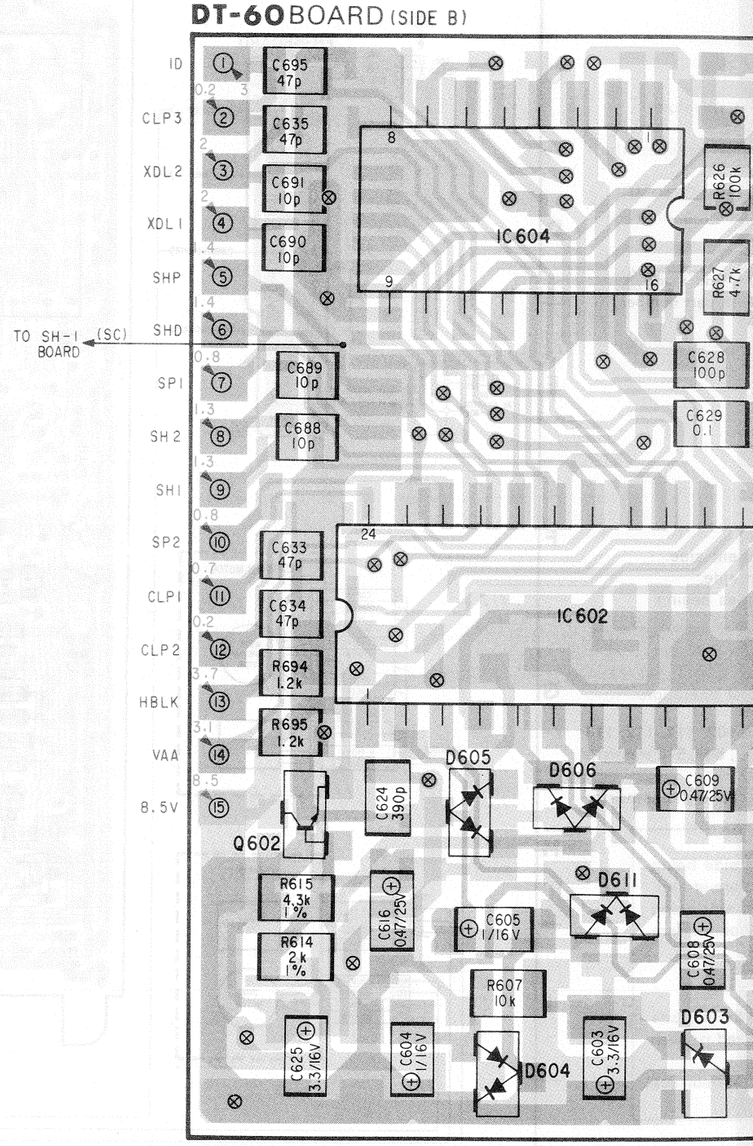

DT-60 (CCD DRIVE, TIMING GENERATOR) PRINTED WIRING BOARD

: mark is slew hole.
: lead wire attached to the component side.
: lead wire attached to the pattern side.
: pattern from the side which enables seeing.
: pattern of the rear side.
: B+ pattern.
: printing resistance.
voltage value is all recording mode of operation.

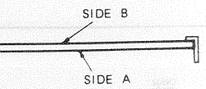

ering side: Parts on the soldering side being seen from the soldering are stated.
ponent side: Parts on the component side being seen from the component are stated.

rding color indication of patterns
atterns being seen in the state from the surface de are indicated in gray pattern and red pattern B+ pattern).
attern being seen in the state of the rear surface de is indicated in green pattern.

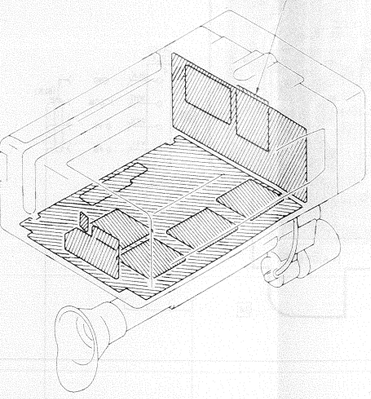

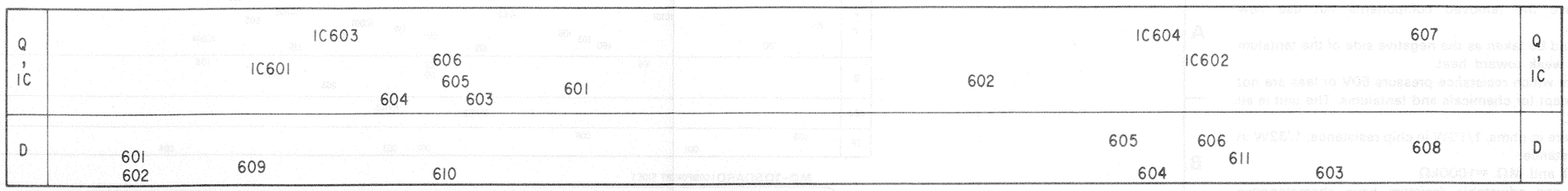

DT-60 BOARD (SIDE A)

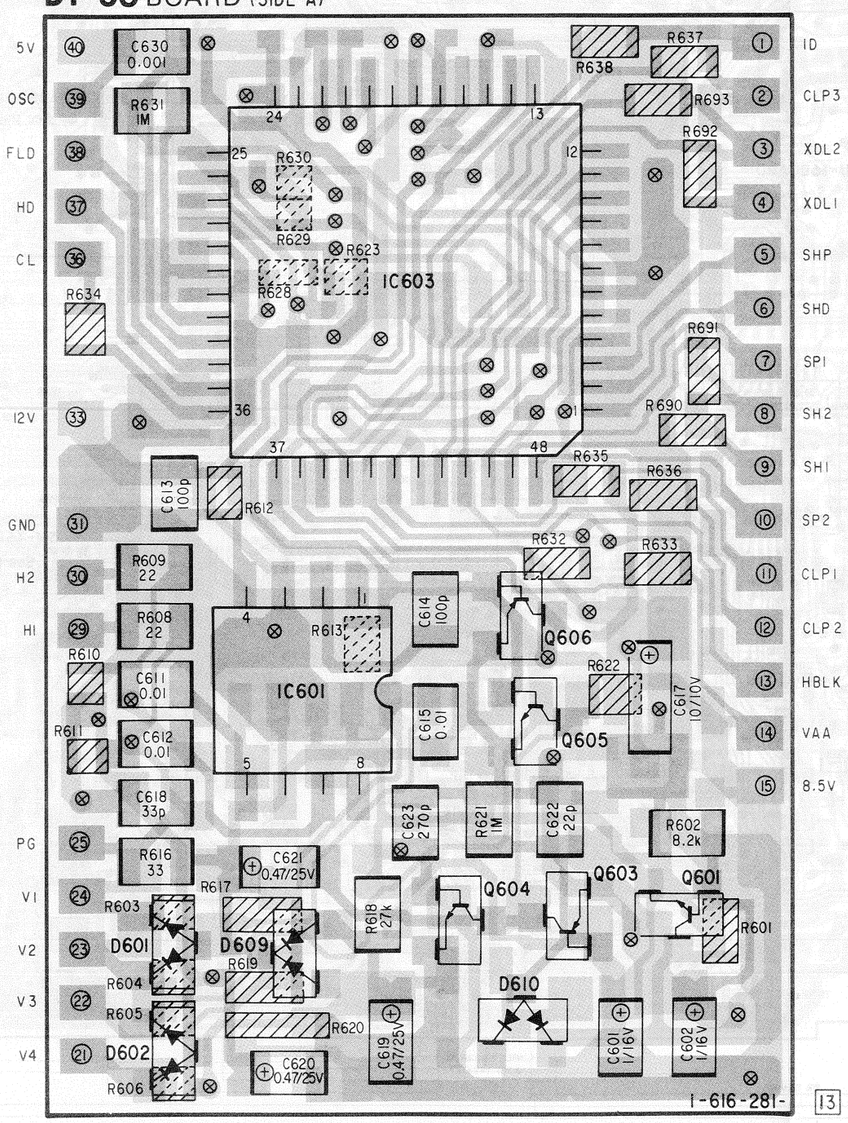

DT-60 BOARD (SIDE B)

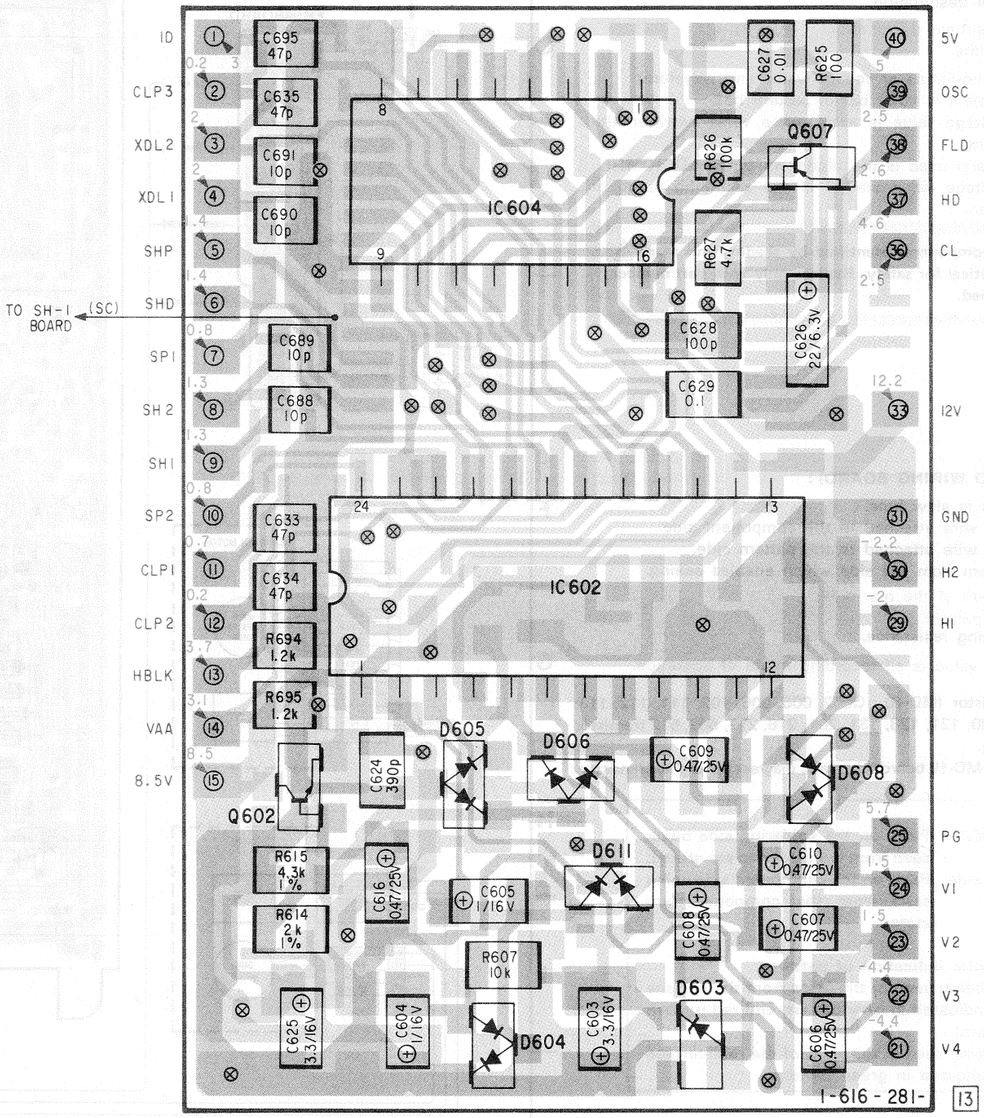

- Caution to be exercised when replacing chip components Do not reuse the removed components but use new components.
  Caution should be taken as the negative side of the tantalum capacitor is weak toward heat.
- All capacitors which resistance pressure 50V or less are not indicated except for chemicals and tantalums. The unit is all μF (p is pF).
- All resistors are in ohms, 1/10W in chip resistance; 1/32W in printing resistance.
  kΩ =1000Ω and MΩ =1000kΩ
- All variable and adjustable resistors have characteristics curve B, which definition is omitted.
- ⊣W⊢ : printing resistor.
- ▭ : panel designation.
- ▭ : adjustment designation.
- ▬ : B+ line.
- Measuring conditions of voltage value and waveform
  (1) The subject is color bar of pattern box.
  (2) The voltage value is a reference value between the grounding.
  (The tester used is the digital multimeter DC10MΩ)
  (3) The voltage value are all in the recording mode of operation.

- **Signal path**

▒ :REC Y & CHROMA SIGNAL

SH-1 (PROCESS) SCHEMATIC DIAGRAM

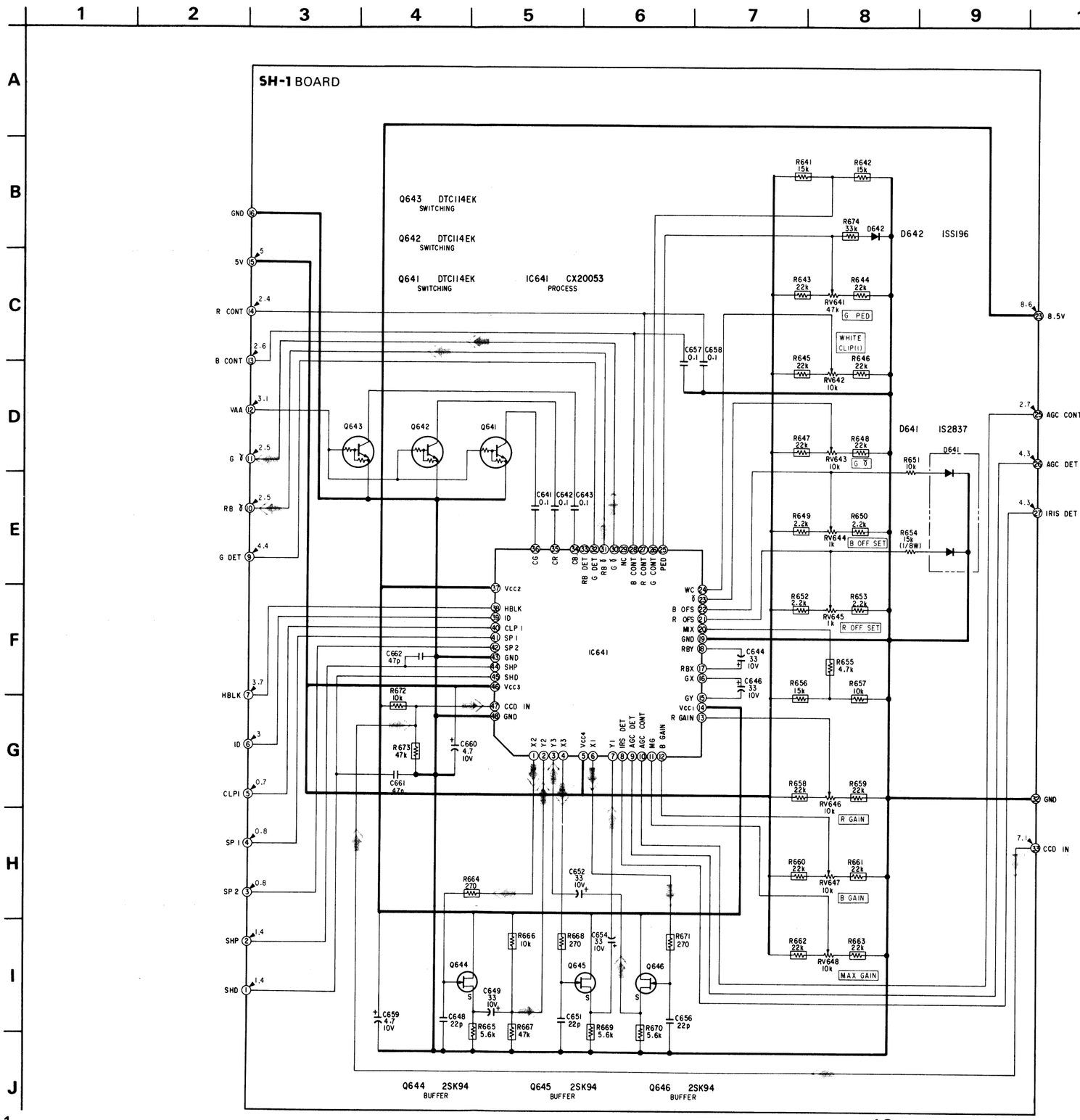

SH-1 (PROCESS) PRINTED WIRING BOARD

- ⊗ : mark is slew hole.
- ○— : lead wire attached to the component side.
- ●— : lead wire attached to the pattern side.
- ▩ : pattern from the side which enables seeing.
- ▩ : pattern of the rear side.
- ▩ : B+ pattern.
- ▨ : printing resistance.
- The voltage value is all recording mode of operation.

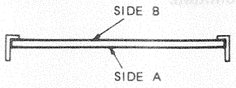

Note

Soldering side: Parts on the soldering side being seen from the soldering are stated.

Component side: Parts on the component side being seen from the component are stated.

Regarding color indication of patterns

* Patterns being seen in the state from the surface side are indicated in gray pattern and red pattern (B+ pattern).
* Pattern being seen in the state of the rear surface side is indicated in green pattern.

SH-1

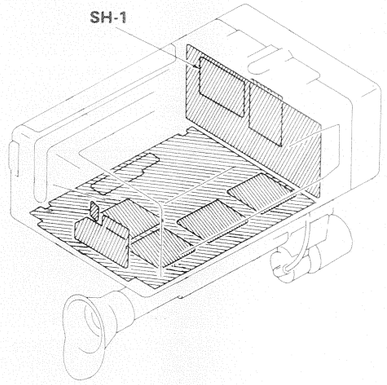

SH-1 BOARD (SIDE A)

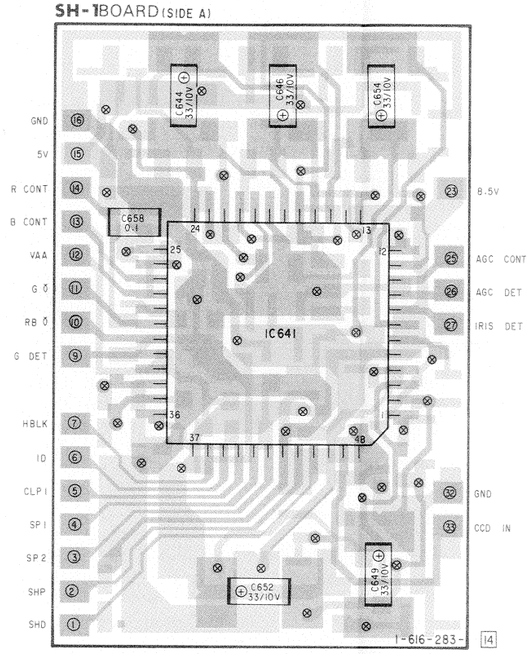

Q・IC	642 643	IC641 641	644 646 645		Q・IC
D	642		641		D
ADJ	RV641 RV642	RV643 RV644	RV645 RV646	RV647 RV648	ADJ

SH-1 BOARD (SIDE B)

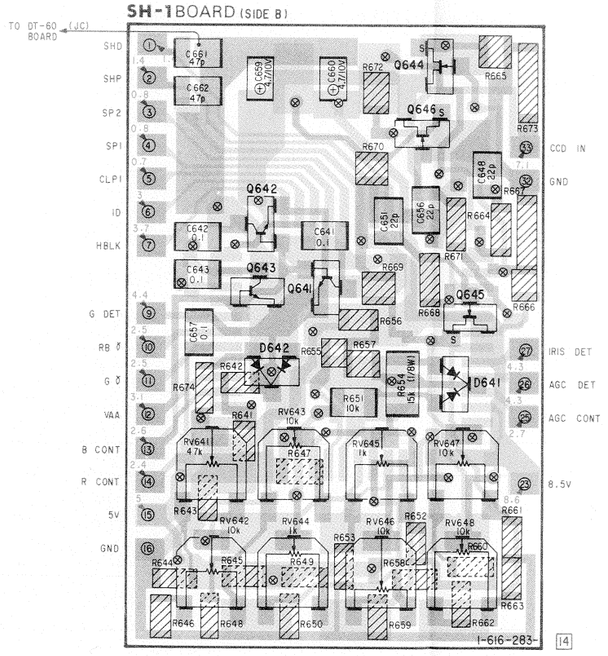

- Caution to be exercised when replacing chip components Do not reuse the removed components but use new components.
  Caution should be taken as the negative side of the tantalum capacitor is weak toward heat.
- All capacitors which resistance pressure 50V or less are not indicated except for chemicals and tantalums. The unit is all μF (p is pF).
- All resistors are in ohms, 1/10W in chip resistance; 1/32W in printing resistance.
  kΩ =1000Ω and MΩ =1000kΩ
- All variable and adjustable resistors have characteristics curve B, which definition is omitted.

Note (SCHEMATIC DIAGRAM) :

- : printing resistor.
- : panel designation.
- : adjustment designation.
- : B+ line.
- Measuring conditions of voltage value and waveform
  (1) The subject is color bar of pattern box.
  (2) The voltage value is a reference value between the grounding.
  (The tester used is the digital multimeter DC10MΩ)
  (3) The voltage value are all in the recording mode of operation.

- **Signal path**
  - :REC Y SIGNAL
  - :REC Y & CHROMA SIGNAL
  - :REC CHROMA SIGNAL

MX-2 (MATRIX) SCHEMATIC DIAGRAM

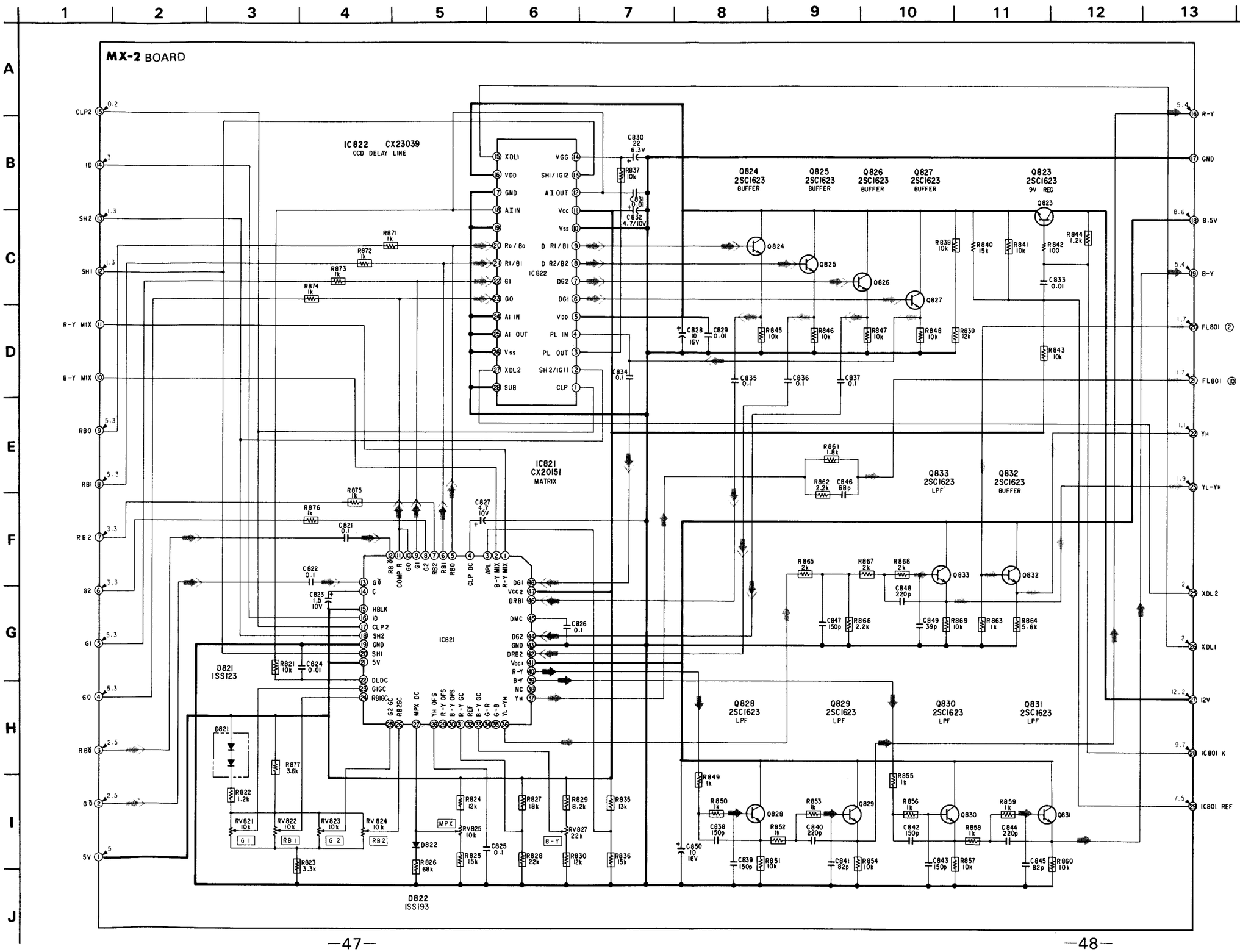

MX-2 (MATRIX) PRINTED WIRING BOARD

- ⊗ : mark is slew hole.
- ○— : lead wire attached to the component side.
- ●— : lead wire attached to the pattern side.
- ▭ : pattern from the side which enables seeing.
- ▭ : pattern of the rear side.
- ▭ : B+ pattern.
- ▨ : printing resistance.
- The voltage value is all recording mode of operation.

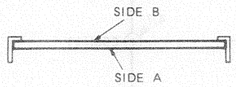

Note

Soldering side: Parts on the soldering side being seen from the soldering are stated.

Component side: Parts on the component side being seen from the component are stated.

Regarding color indication of patterns

* Patterns being seen in the state from the surface side are indicated in gray pattern and red pattern (B+ pattern).
* Pattern being seen in the state of the rear surface side is indicated in green pattern.

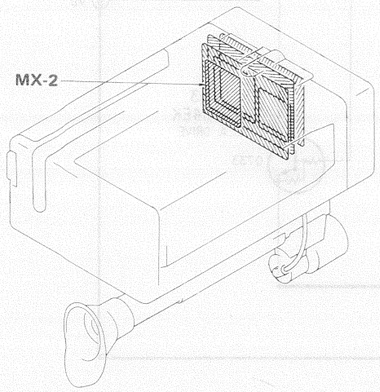

Q , IC	D	ADJ
825		
824 828		
831		
830		
IC821		
823		
	821	RV821 RV823 RV822 RV824
	822	RV827 RV825
833		
IC822		
832		
827 826 829		

MX-2 BOARD (SIDE A)

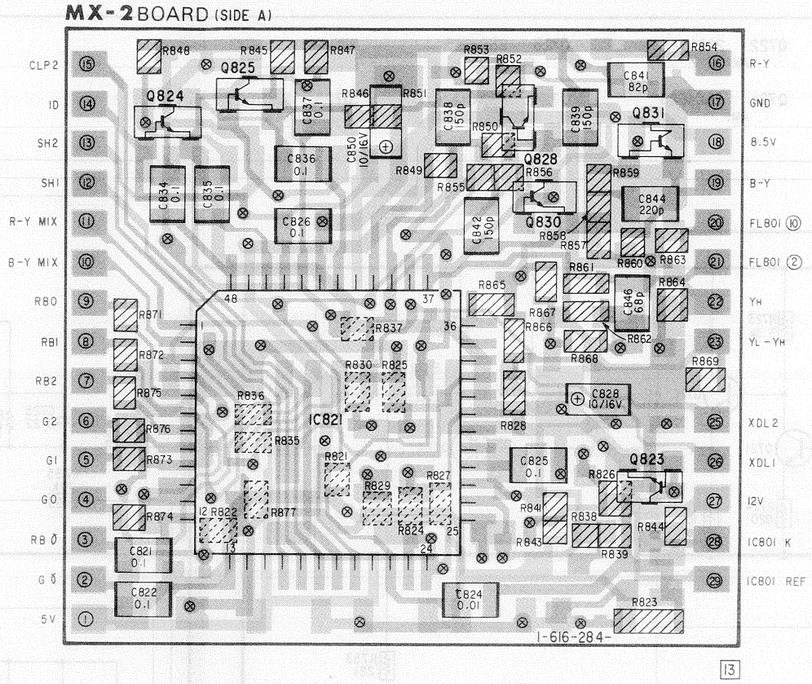

MX-2 BOARD (SIDE B)

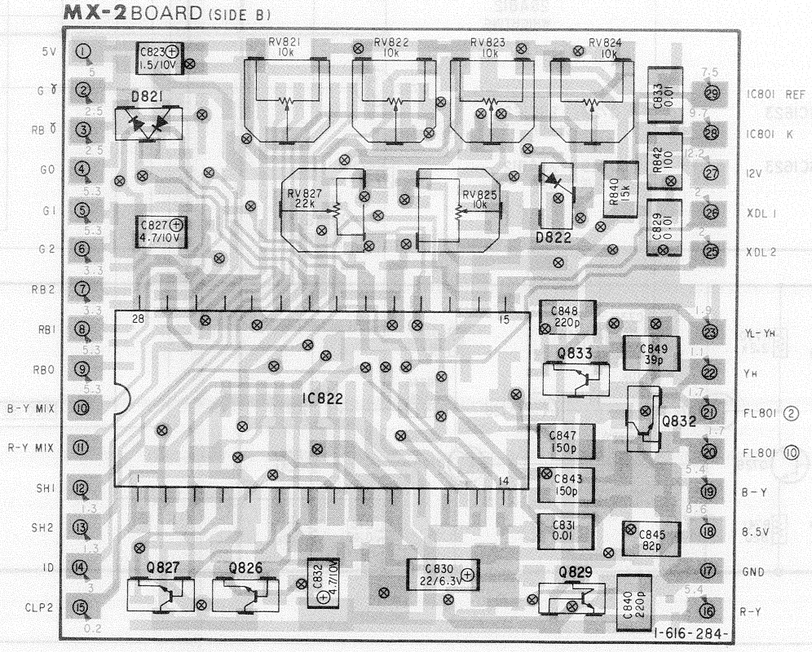

IA-1 (IRIS DETECTION AGC CONTROL) SCHEMATIC DIAGRAM

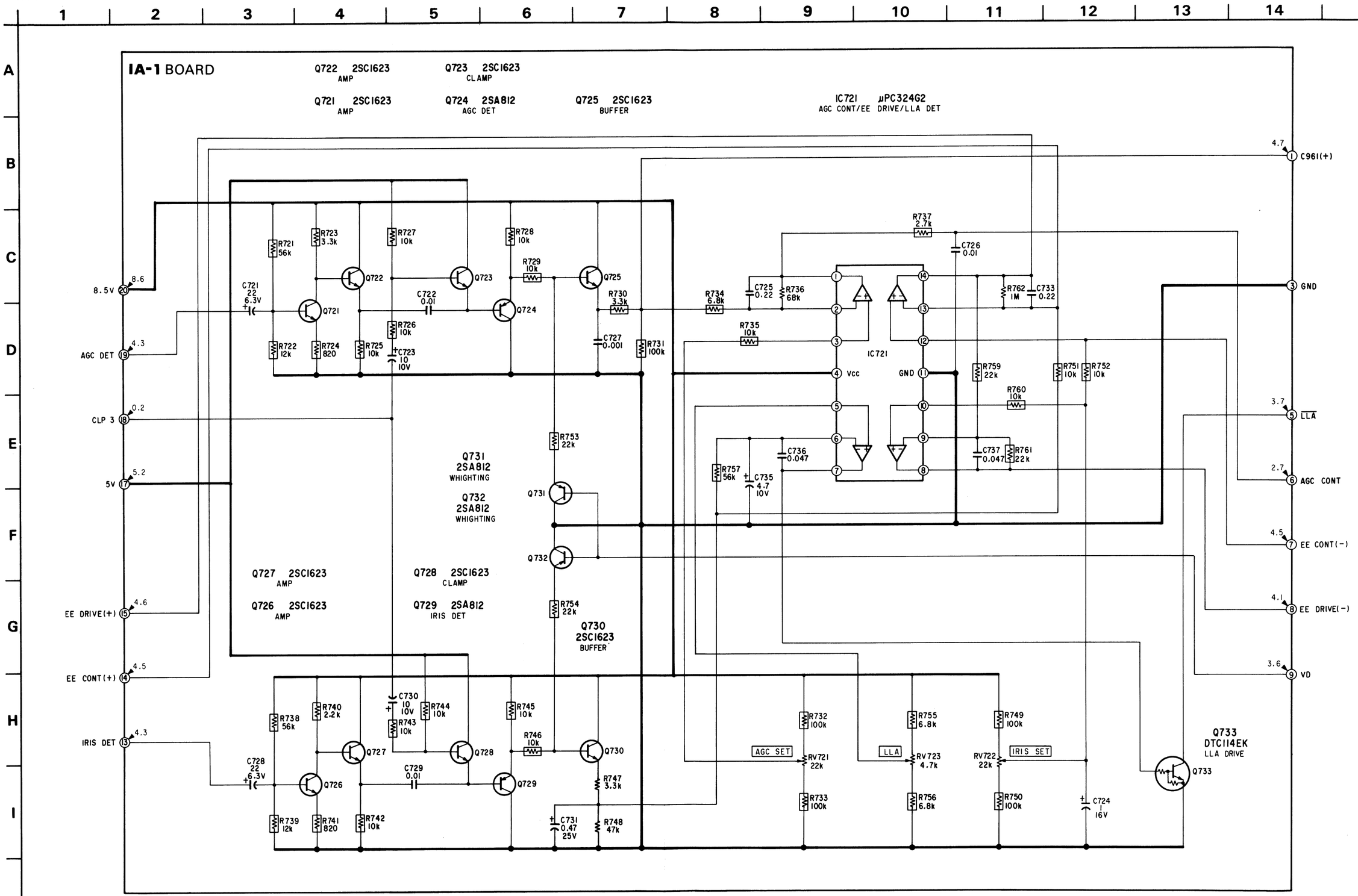

IA-1 (IRIS DETECTION AGC CONTROL) PRINTED WIRING BOARD

- Caution to be exercised when replacing chip components
  Do not reuse the removed components but use new components.
  Caution should be taken as the negative side of the tantalum capacitor is weak toward heat.
- All capacitors which resistance pressure 50V or less are not indicated except for chemicals and tantalums. The unit is all μF (p is pF).
- All resistors are in ohms, 1/10W in chip resistance; 1/32W in printing resistance.
  kΩ =1000Ω and MΩ =1000kΩ
- All variable and adjustable resistors have characteristics curve B, which definition is omitted.

Note (SCHEMATIC DIAGRAM) :

- : printing resistor.
- : panel designation.
- : adjustment designation.
- : B+ line.
- Measuring conditions of voltage value and waveform
  (1) The subject is color bar of pattern box.
  (2) The voltage value is a reference value between the grounding.
  (The tester used is the digital multimeter DC10MΩ)
  (3) The voltage value are all in the recording mode of operation.

Note (PRINTED WIRING BOARD) :

- ⊗ : mark is slew hole.
- ○— : lead wire attached to the component side.
- ●— : lead wire attached to the pattern side.
- : pattern from the side which enables seeing.
- : pattern of the rear side.
- : B+ pattern.
- : printing resistance.
- The voltage value is all recording mode of operation.
- Digital transistor (IA-1 : Q733)transistor with resistor.
  Refer to the IA-1 board schematic diagram for digital transistor.

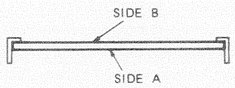

Note
Soldering side: Parts on the soldering side being seen from the soldering are stated.
Component side: Parts on the component side being seen from the component are stated.

Regarding color indication of patterns
* Patterns being seen in the state from the surface side are indicated in gray pattern and red pattern (B+ pattern).
* Pattern being seen in the state of the rear surface side is indicated in green pattern.

IA-1 BOARD (SIDE A)

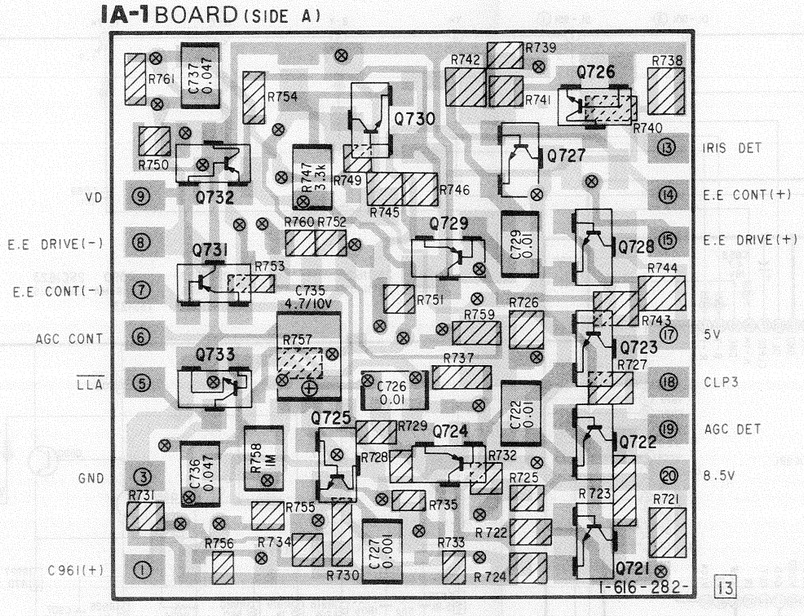

Q・IC	732 731 733	730	729	727	726 728 723 722 721	Q・IC
		725 IC721	724			
ADJ	RV723 RV722		RV721			ADJ

IA-1 BOARD (SIDE B)

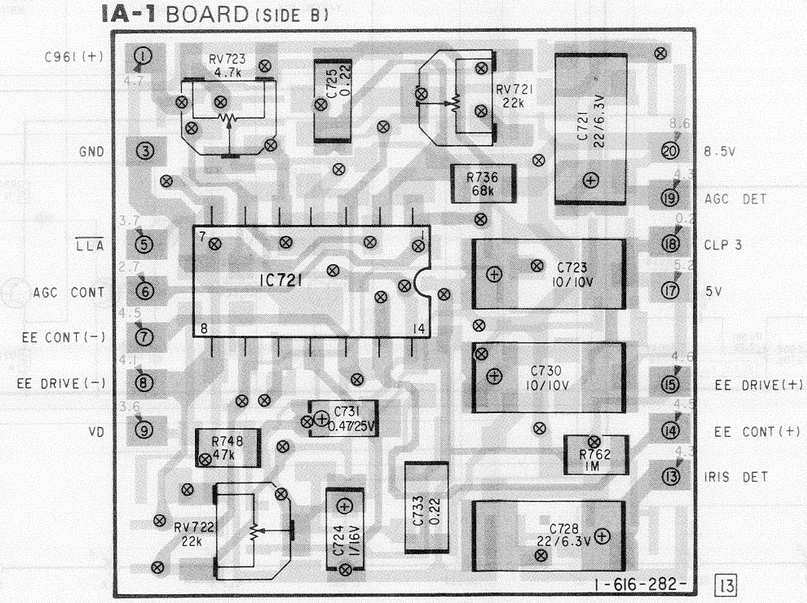

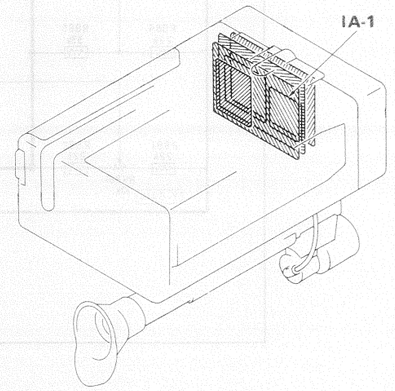

ED-11 (ENCODER) SCHEMATIC DIAGRAM

ED-11 BOARD

IC881 CX20055 ENCODER

Q888 2SC1623 CHROMA EMPHASIS
Q889 2SC1623 CHROMA EMPHASIS
Q890 2SC1623 CHROMA EMPHASIS
Q891 2SC1623 BUFFER
Q892 2SA812 BUFFER
D882 ISS123

D881 ISS123

Q882 2SC1623 BUFFER
Q883 2SC1623 CLAMP
Q886 2SC1623 WHITE CLIP
Q887 2SC1623 BUFFER
Q881 2SC1623 Y/SYNC MIX
Q884 2SA812 BUFFER
Q885 2SA812 WHITE CLIP

Q893 2SC1623 BF BUFFER

APL · APS · HUE · PED · C GAIN · Y GAIN · CB 90° · CB 0° · BURST GAIN · WHITE CLIP(2)

- GND
- 5V
- REC C
- BF
- FL952
- L ALT
- CLP 3
- BLK
- SC
- GND
- REC Y

- Signal path
  - :REC Y SIGNAL
  - :REC CHROMA SIGNAL

ED-11 (ENCODER) PRINTED WIRING BOARD

- Caution to be exercised when replacing chip components
  Do not reuse the removed components but use new components.
  Caution should be taken as the negative side of the tantalum capacitor is weak toward heat.
- All capacitors which resistance pressure 50V or less are not indicated except for chemicals and tantalums. The unit is all μF (p is pF).
- All resistors are in ohms, 1/10W in chip resistance; 1/32W in printing resistance.
  kΩ =1000Ω and MΩ =1000kΩ
- All variable and adjustable resistors have characteristics curve B, which definition is omitted.

Note (SCHEMATIC DIAGRAM) :

- : printing resistor.
- : panel designation.
- : adjustment designation.
- : B+ line.
- Measuring conditions of voltage value and waveform
  (1) The subject is color bar of pattern box.
  (2) The voltage value is a reference value between the grounding.
  (The tester used is the digital multimeter DC10MΩ)
  (3) The voltage value are all in the recording mode of operation.

Note (PRINTED WIRING BOARD) :

- ⊗ : mark is slew hole.
- ○— : lead wire attached to the component side.
- ●— : lead wire attached to the pattern side.
- : pattern from the side which enables seeing.
- : pattern of the rear side.
- : B+ pattern.
- : printing resistance.
- The voltage value is all recording mode of operation.

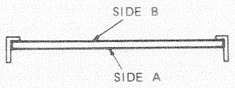

Note
Soldering side: Parts on the soldering side being seen from the soldering are stated.
Component side: Parts on the component side being seen from the component are stated.

Regarding color indication of patterns
* Patterns being seen in the state from the surface side are indicated in gray pattern and red pattern (B+ pattern).
* Pattern being seen in the state of the rear surface side is indicated in green pattern.

Q , IC	D	ADJ
IC881		
892		
893		
883		
885		
886		
887		
884		
882		RV890
889		
888 881	882	
890		
	881	
891		
		RV881
		RV882 RV889 RV883
		RV884 RV887 RV886 RV891 RV888

ED-11 BOARD (SIDE A)

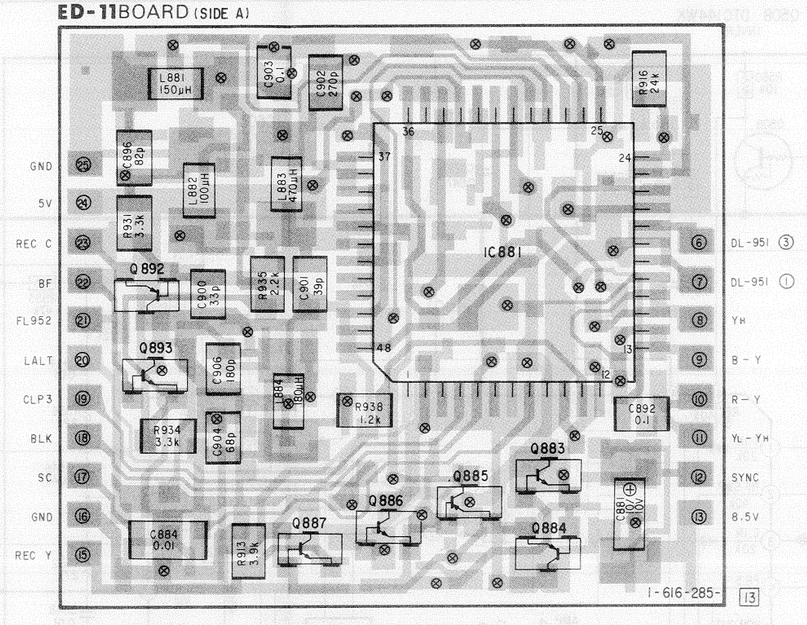

ED-11 BOARD (SIDE B)

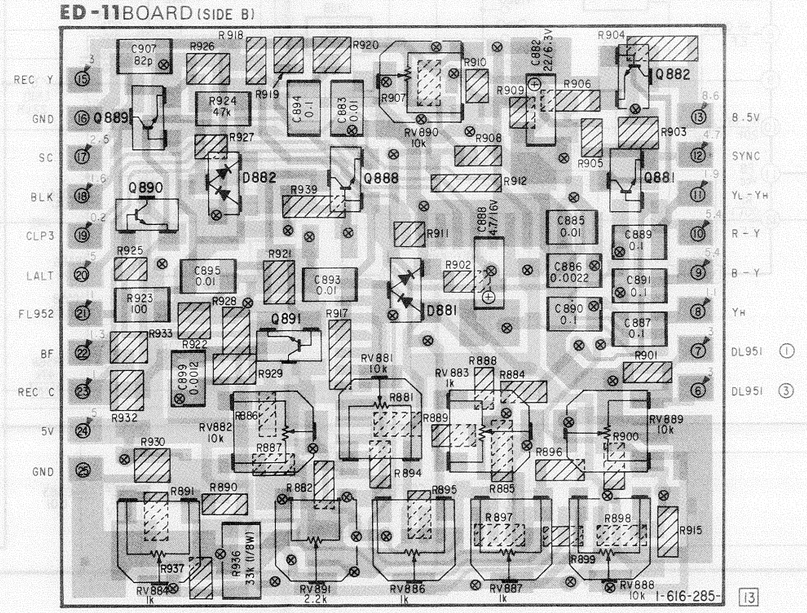

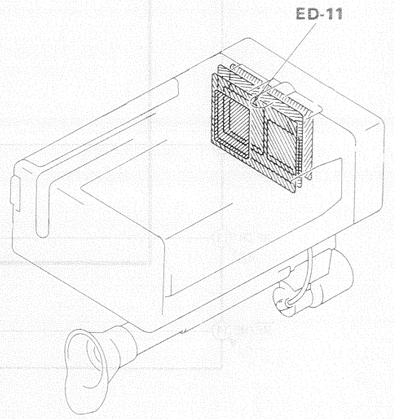

RP-29 (HEAD AMP) SCHEMATIC DIAGRAM

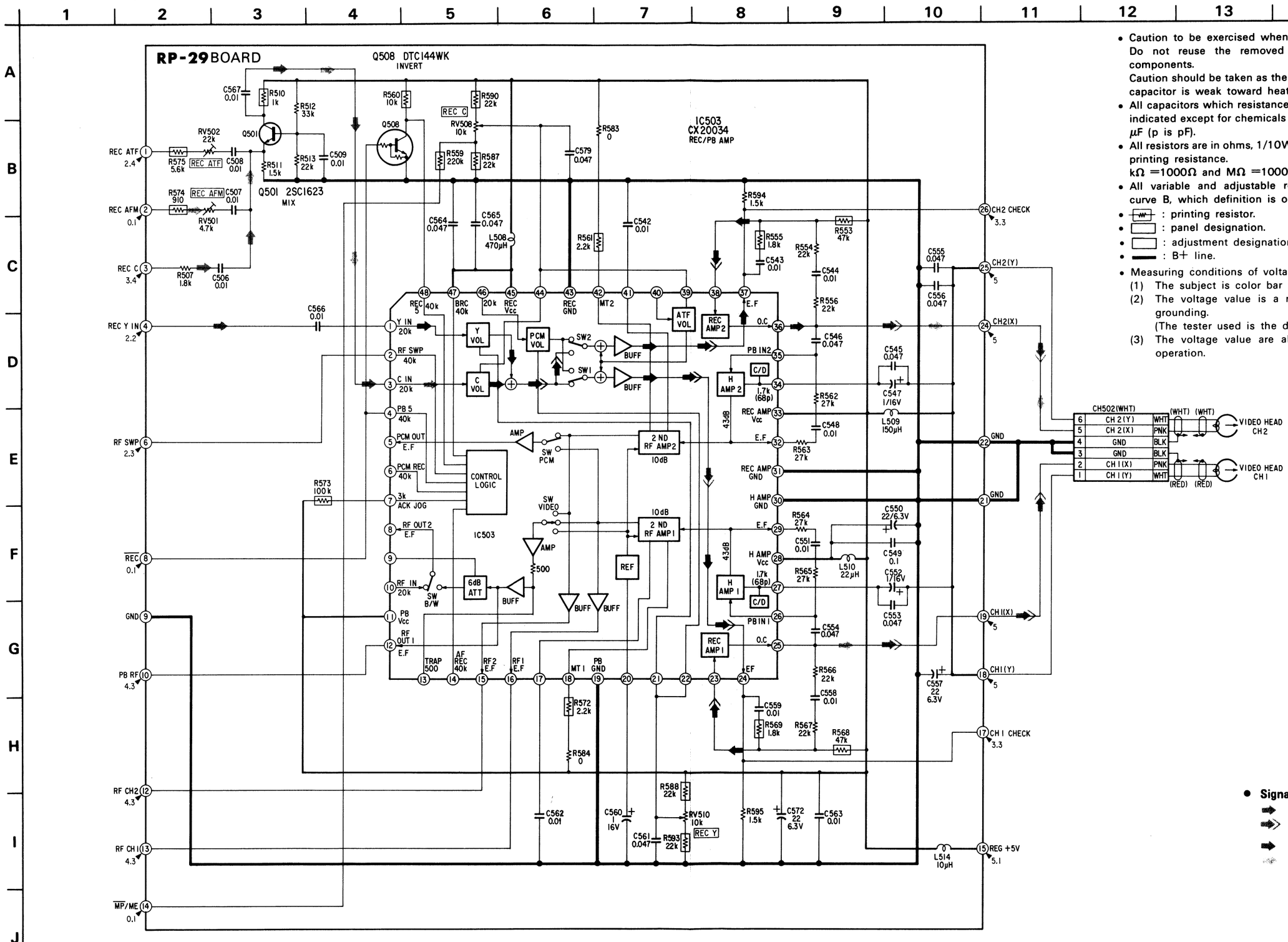

- Caution to be exercised when replacing chip components
  Do not reuse the removed components but use new components.
  Caution should be taken as the negative side of the tantalum capacitor is weak toward heat.
- All capacitors which resistance pressure 50V or less are not indicated except for chemicals and tantalums. The unit is all μF (p is pF).
- All resistors are in ohms, 1/10W in chip resistance; 1/32W in printing resistance.
  kΩ =1000Ω and MΩ =1000kΩ
- All variable and adjustable resistors have characteristics curve B, which definition is omitted.
- : printing resistor.
- : panel designation.
- : adjustment designation.
- : B+ line.
- Measuring conditions of voltage value and waveform
  (1) The subject is color bar of pattern box.
  (2) The voltage value is a reference value between the grounding.
  (The tester used is the digital multimeter DC10MΩ)
  (3) The voltage value are all in the recording mode of operation.

- **Signal path**
  - :REC Y SIGNAL
  - :REC Y & CHROMA SIG
  - :REC CHROMA SIGNAL
  - :REC AUDIO SIGNAL

RP-29 (HEAD AMP) PRINTED WIRING BOARD

- ⊗ : mark is slew hole.
- ○— : lead wire attached to the component side.
- ●— : lead wire attached to the pattern side.
- ▭ : pattern from the side which enables seeing.
- ▭ : pattern of the rear side.
- ▭ : B+ pattern.
- ▨ : printing resistance.
- The voltage value is all recording mode of operation.
- Digital transistor (RP-29 : Q508)transistor with resistor. Refer to the RP-29 board schematic diagram for digital transistor.

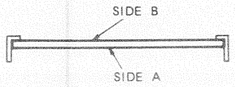

Note

Soldering side: Parts on the soldering side being seen from the soldering are stated.

Component side: Parts on the component side being seen from the component are stated.

Regarding color indication of patterns

* Patterns being seen in the state from the surface side are indicated in gray pattern and red pattern (B+ pattern).

* Pattern being seen in the state of the rear surface side is indicated in green pattern.

RP-29 BOARD (SIDE A)

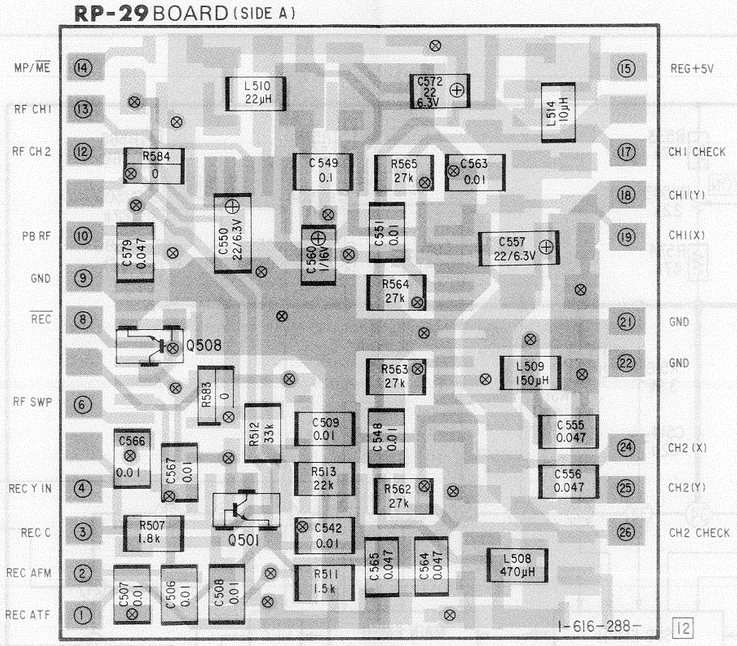

RP-29 BOARD (SIDE B)

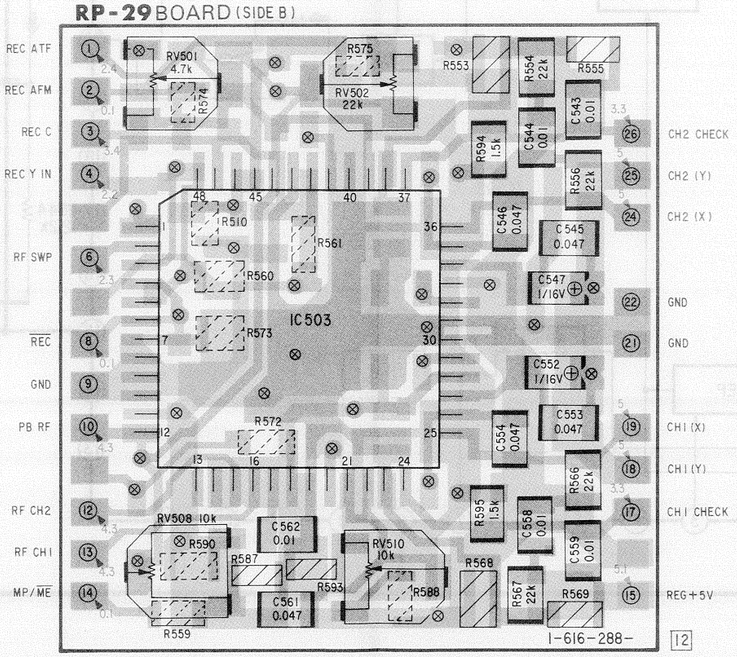

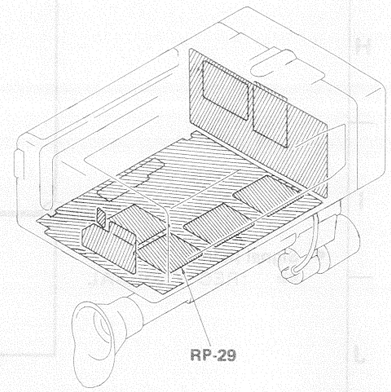

YM-2 (Y SIGNAL PROCESSING) SCHEMATIC DIAGRAM

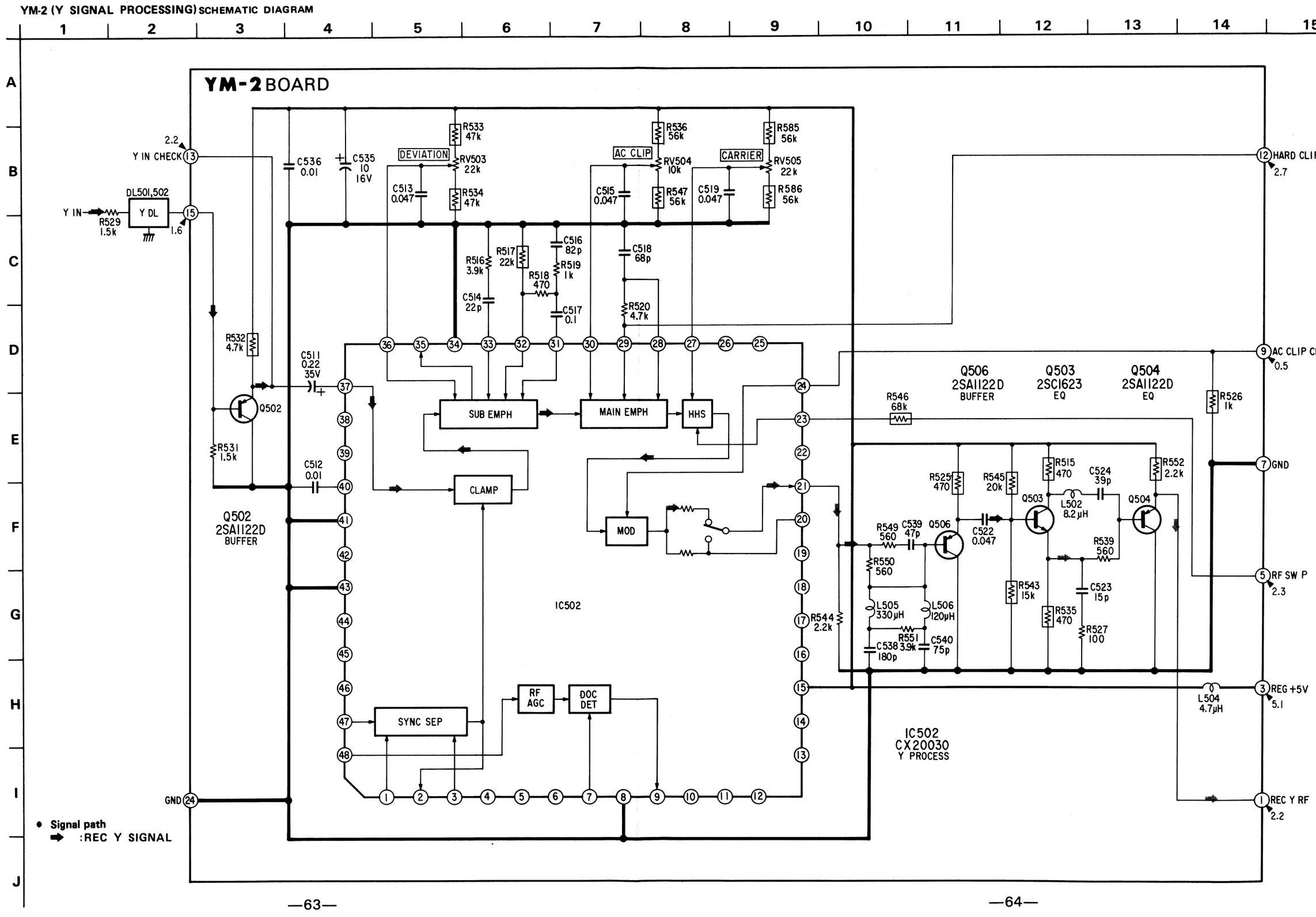

- Caution to be exercised when replacing chip components Do not reuse the removed components but use new components.
  Caution should be taken as the negative side of the tantalum capacitor is weak toward heat.
- All capacitors which resistance pressure 50V or less are not indicated except for chemicals and tantalums. The unit is all μF (p is pF).
- All resistors are in ohms, 1/10W in chip resistance; 1/32W in printing resistance.
  kΩ =1000Ω and MΩ =1000kΩ
- All variable and adjustable resistors have characteristics curve B, which definition is omitted.

Note (SCHEMATIC DIAGRAM) :

- : printing resistor.
- : panel designation.
- : adjustment designation.
- : B+ line.
- : B− line.
- Measuring conditions of voltage value and waveform
  (1) The subject is color bar of pattern box.
  (2) The voltage value is a reference value between the grounding.
  (The tester used is the digital multimeter DC10MΩ)
  (3) The voltage value are all in the recording mode of operation.

Note (PRINTED WIRING BOARD) :

- ⊗ : mark is slew hole.
- ○— : lead wire attached to the component side.
- ●— : lead wire attached to the pattern side.
- : pattern from the side which enables seeing.
- : pattern of the rear side.
- : B+ pattern.
- : printing resistance.
- The voltage value is all recording mode of operation.

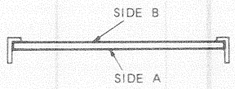

Note

Soldering side: Parts on the soldering side being seen from the soldering are stated.

Component side: Parts on the component side being seen from the component are stated.

Regarding color indication of patterns

- Patterns being seen in the state from the surface side are indicated in gray pattern and red pattern (B+ pattern).
- Pattern being seen in the state of the rear surface side is indicated in green pattern.

YM-2 (Y SIGNAL PROCESSING) PRINTED WIRING BOARD

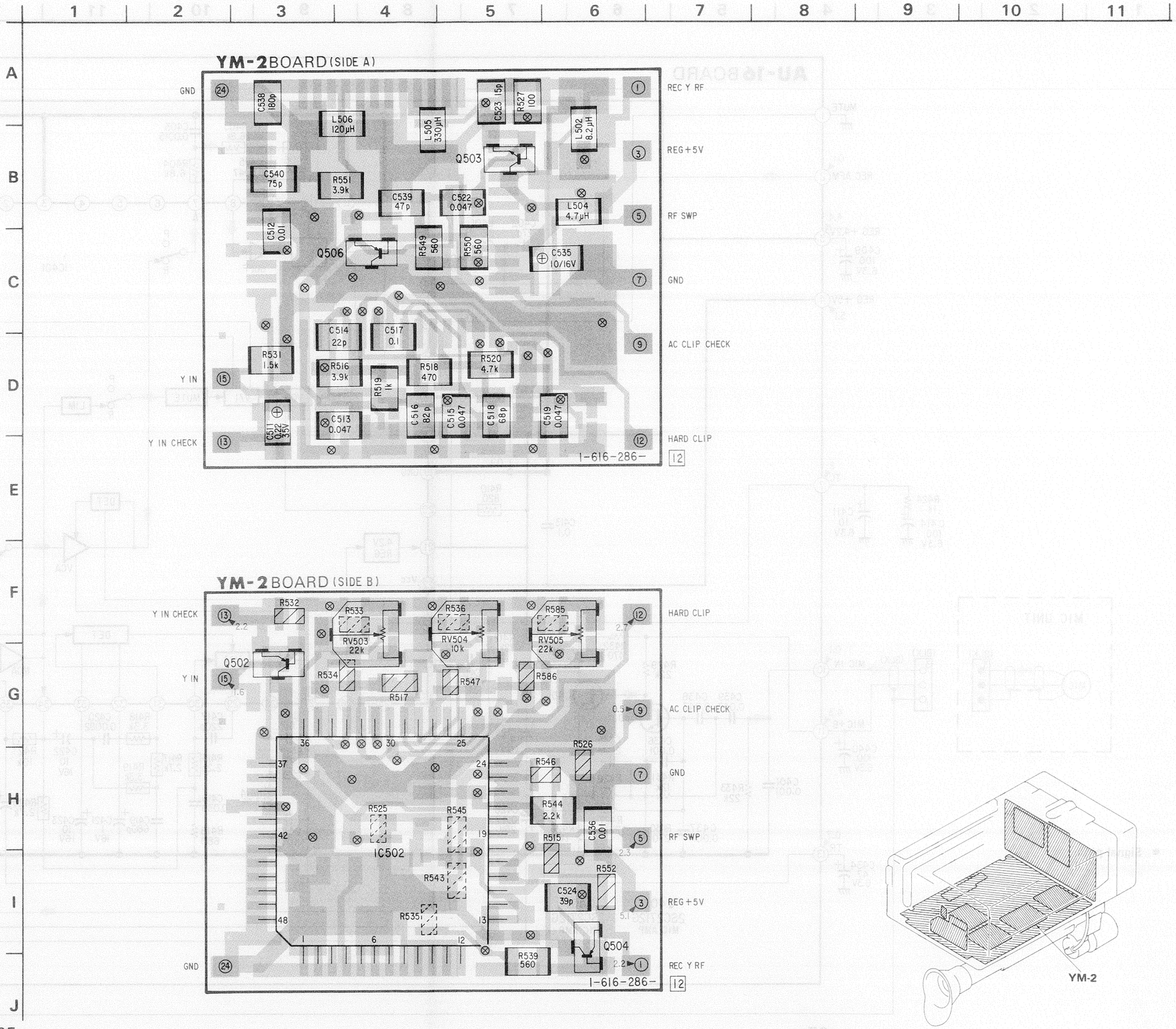

AU-16 (AUDIO) SCHEMATIC DIAGRAM

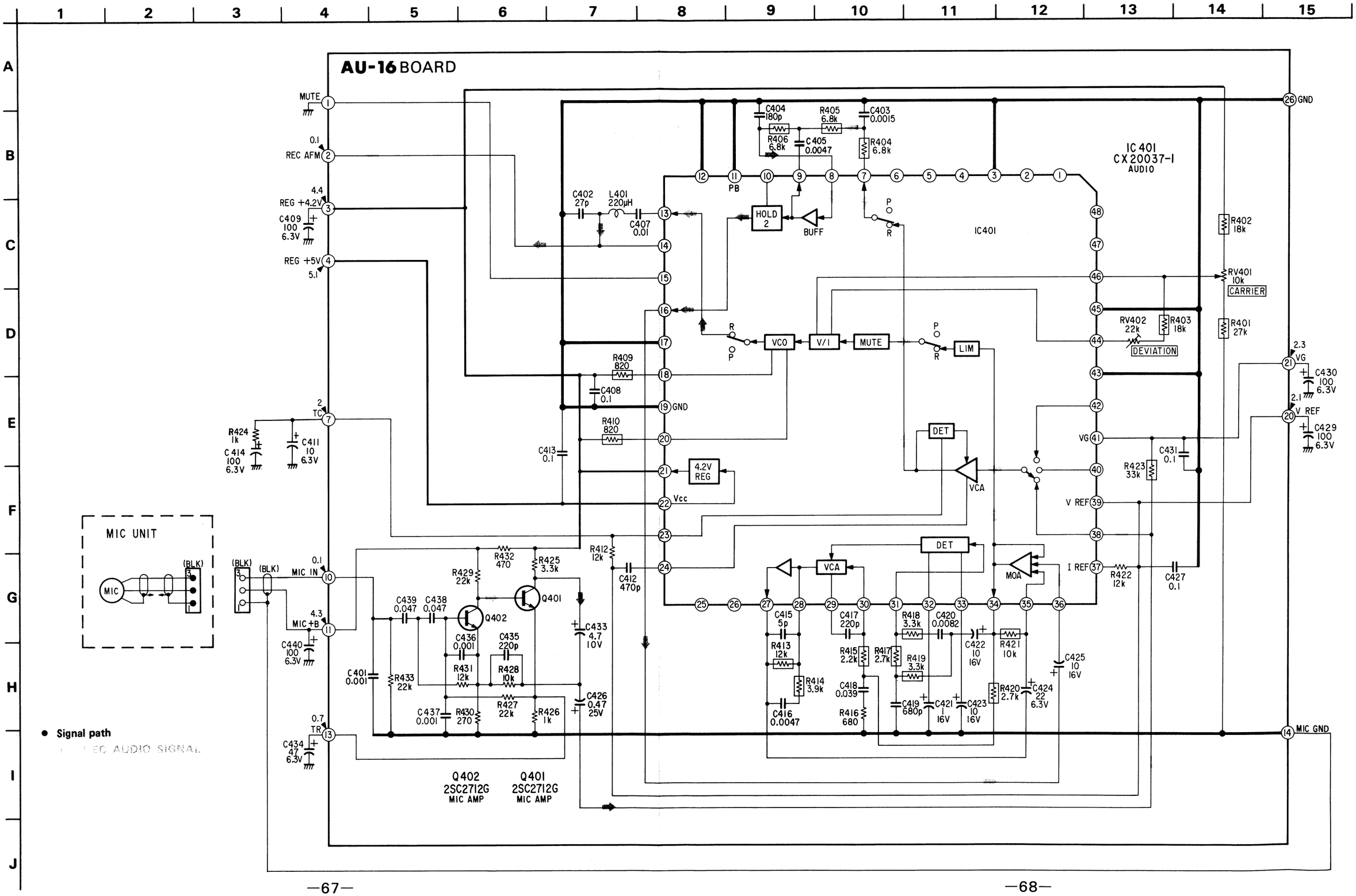

AU-16 (AUDIO) PRINTED WIRING BOARD

- Caution to be exercised when replacing chip components
  Do not reuse the removed components but use new components.
  Caution should be taken as the negative side of the tantalum capacitor is weak toward heat.
- All capacitors which resistance pressure 50V or less are not indicated except for chemicals and tantalums. The unit is all μF (p is pF).
- All resistors are in ohms, 1/10W in chip resistance; 1/32W in printing resistance.
  kΩ =1000Ω and MΩ =1000kΩ
- All variable and adjustable resistors have characteristics curve B, which definition is omitted.

Note (SCHEMATIC DIAGRAM) :

- : printing resistor.
- : panel designation.
- : adjustment designation.
- : B+ line.
- Measuring conditions of voltage value and waveform
  (1) The subject is color bar of pattern box.
  (2) The voltage value is a reference value between the grounding.
  (The tester used is the digital multimeter DC10MΩ)
  (3) The voltage value are all in the recording mode of operation.

Note (PRINTED WIRING BOARD) :

- ⊗ : mark is slew hole.
- ○— : lead wire attached to the component side.
- ●— : lead wire attached to the pattern side.
- : pattern from the side which enables seeing.
- : pattern of the rear side.
- : B+ pattern.
- : printing resistance.
- The voltage value is all recording mode of operation.

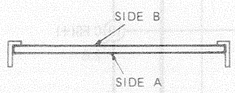

Note
Soldering side: Parts on the soldering side being seen from the soldering are stated.
Component side: Parts on the component side being seen from the component are stated.

Regarding color indication of patterns
* Patterns being seen in the state from the surface side are indicated in gray pattern and red pattern (B+ pattern).
* Pattern being seen in the state of the rear surface side is indicated in green pattern.

AU-16 BOARD (SIDE A)

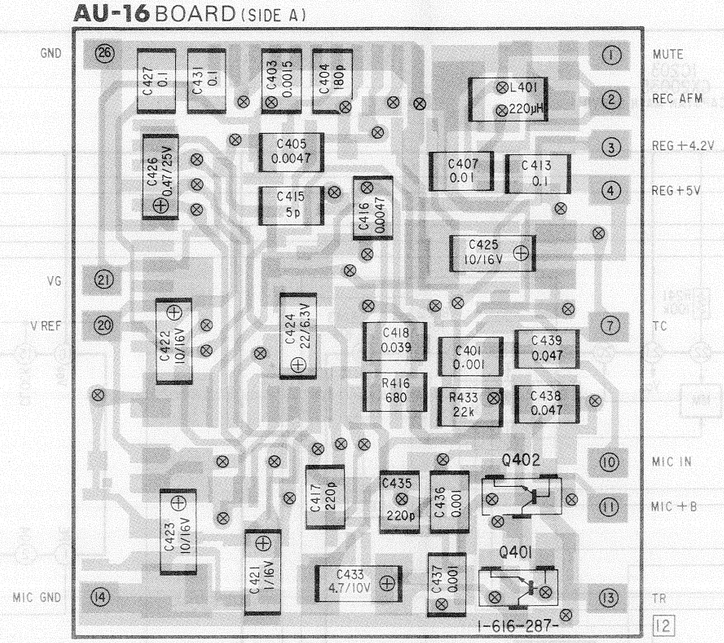

AU-16 BOARD (SIDE B)

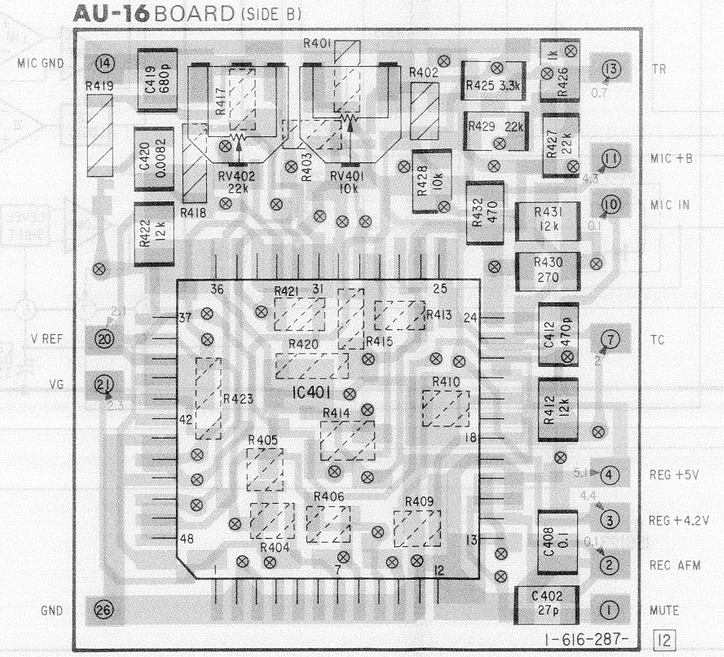

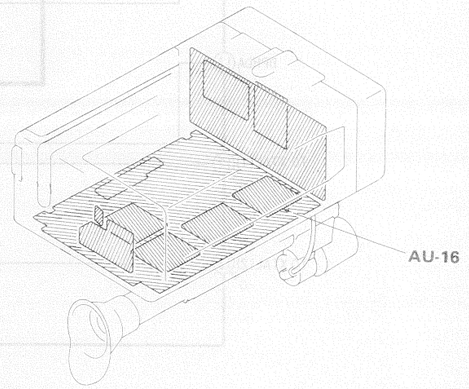

SV-16 (SERVO)SCHEMATIC DIAGRAM

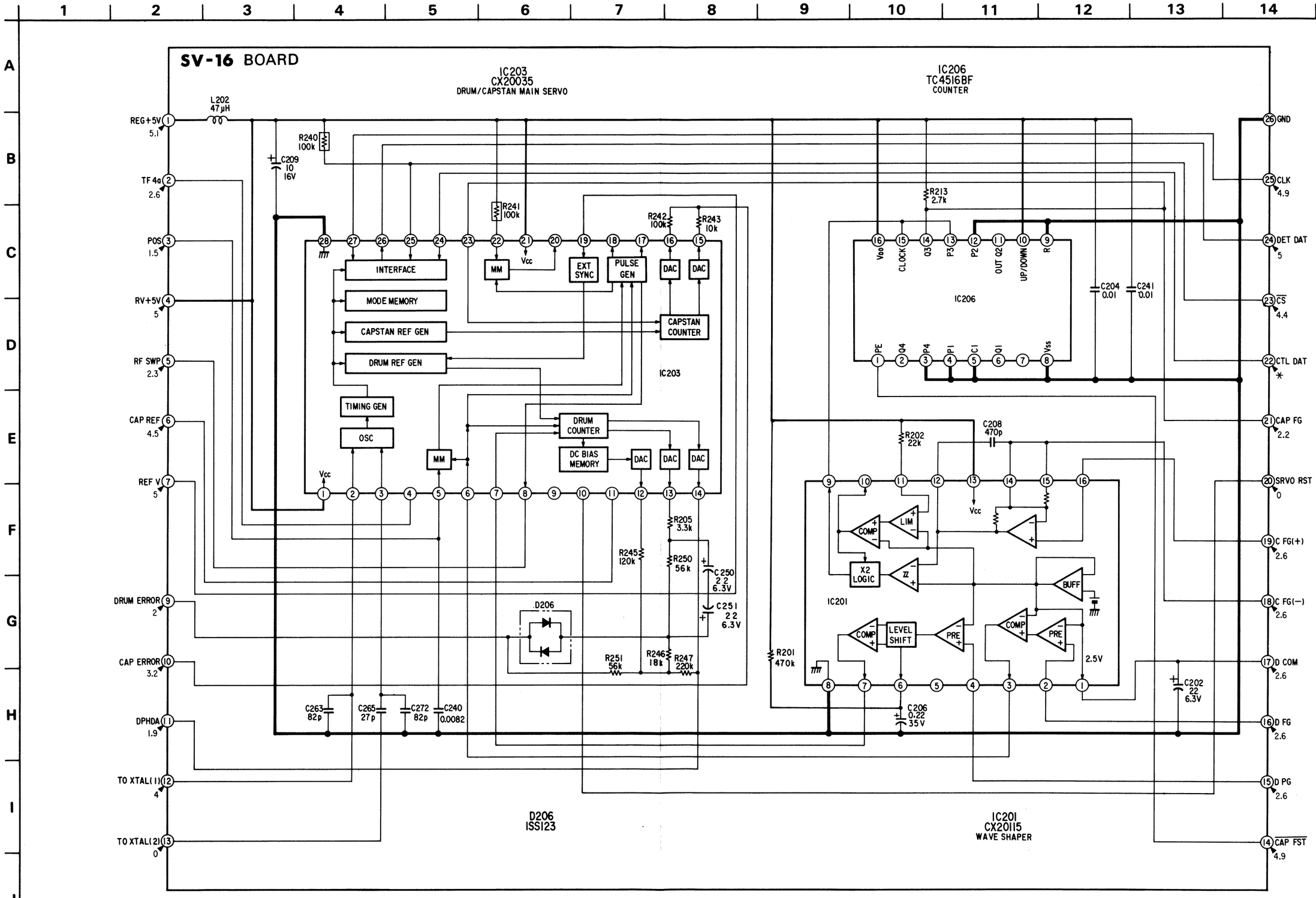

SV-16 (SERVO) PRINTED WIRING BOARD

- Caution to be exercised when replacing chip components
  Do not reuse the removed components but use new components.
  Caution should be taken as the negative side of the tantalum capacitor is weak toward heat.
- All capacitors which resistance pressure 50V or less are not indicated except for chemicals and tantalums. The unit is all μF (p is pF).
- All resistors are in ohms, 1/10W in chip resistance; 1/32W in printing resistance.
  kΩ =1000Ω and MΩ =1000kΩ
- All variable and adjustable resistors have characteristics curve B, which definition is omitted.

Note (SCHEMATIC DIAGRAM) :

- : printing resistor.
- : panel designation.
- : adjustment designation.
- : B+ line.
- Measuring conditions of voltage value and waveform
  (1) The subject is color bar of pattern box.
  (2) The voltage value is a reference value between the grounding.
  (The tester used is the digital multimeter DC10MΩ)
  (3) The voltage value are all in the recording mode of operation.

Note (PRINTED WIRING BOARD) :

- ⊗ : mark is slew hole.
- ○— : lead wire attached to the component side.
- ●— : lead wire attached to the pattern side.
- : pattern from the side which enables seeing.
- : pattern of the rear side.
- : B+ pattern.
- : printing resistance.
- The voltage value is all recording mode of operation.

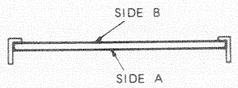

Note
Soldering side: Parts on the soldering side being seen from the soldering are stated.
Component side: Parts on the component side being seen from the component are stated.

Regarding color indication of patterns
* Patterns being seen in the state from the surface side are indicated in gray pattern and red pattern (B+ pattern).
* Pattern being seen in the state of the rear surface side is indicated in green pattern.

SV-16 BOARD (SIDE A)

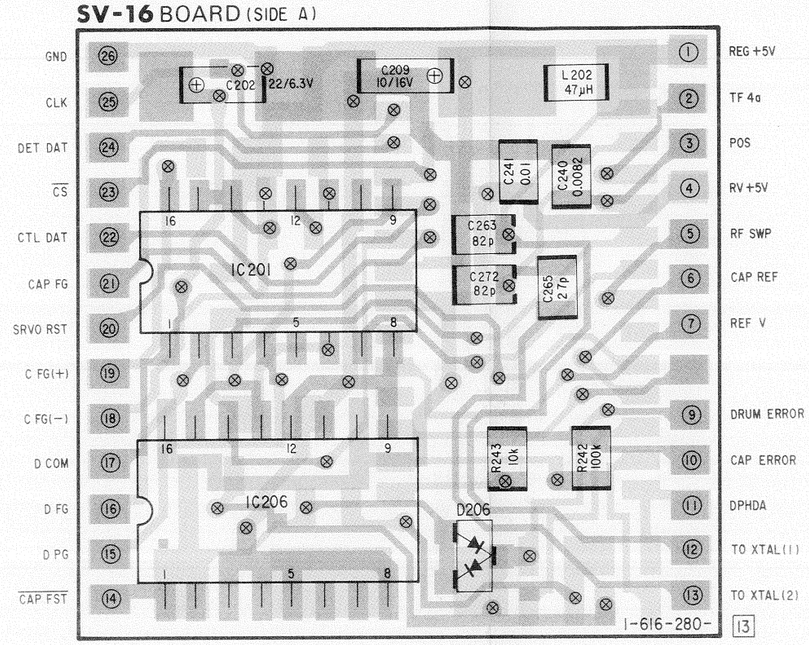

SV-16 BOARD (SIDE B)

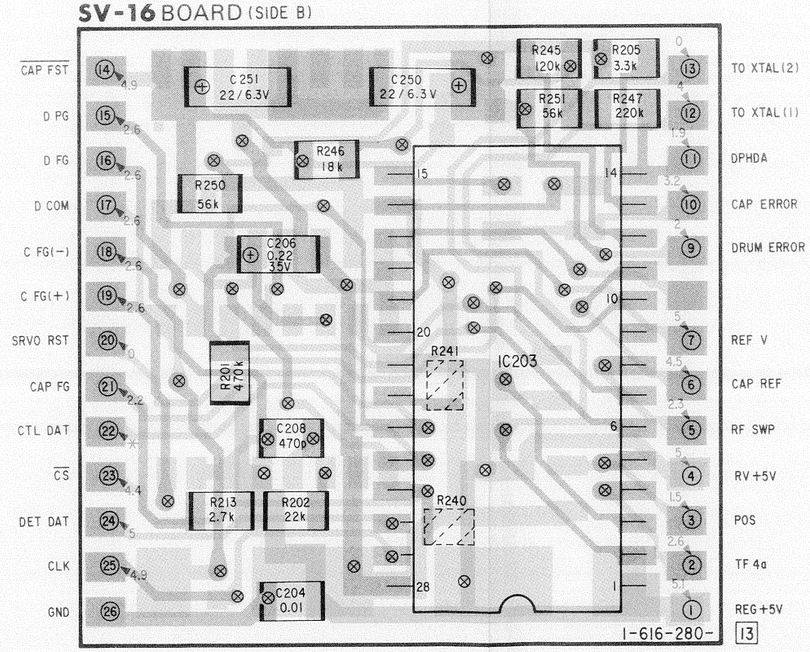

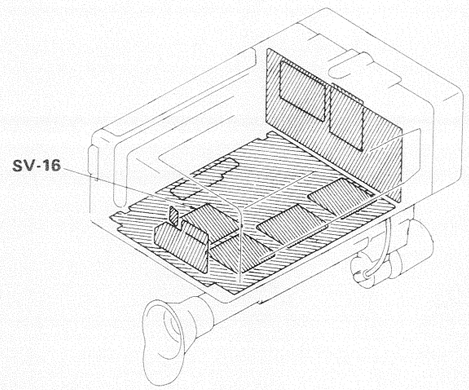

CCD-M8E

SONY

SERVICE MANUAL

AEP Model
AUS Model
E Model
UK Model

February, 1987

SUPPLEMENT-4

VCO ADJUSTMENT

Equipment required: Stable DC Power Supply (12V3A)
Digital Voltmeter

Adjustment Procedure:

1) Supply 7.0±0.5V from the stable DV power supply to the power supply contact point spring. (See Fig. 1)
2) Clip together for shorting LENS DOOR SW (S901). Insert a cassette.
3) For recording mode, momentarily short REC SW on MD-10 Board to GND by actuating its contact spring to engage a REC mode.
4) Connect the digital voltmeter to R780 and R781 mounted pattern on VC-4 Board. (See Fig. 2)
5) By turning CT771 on VC-4 Board, adjust the voltage level at 2.5Vdc.

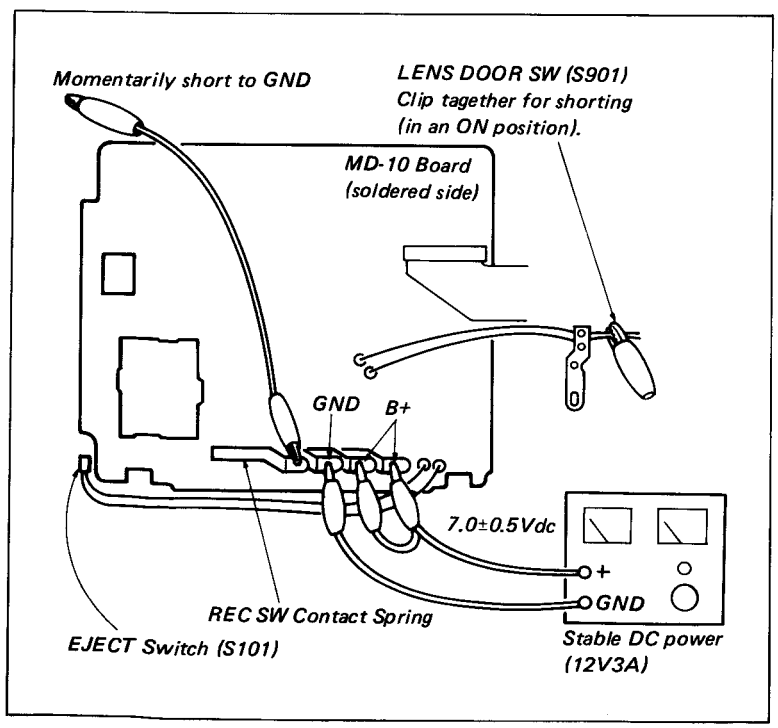

Fig.1

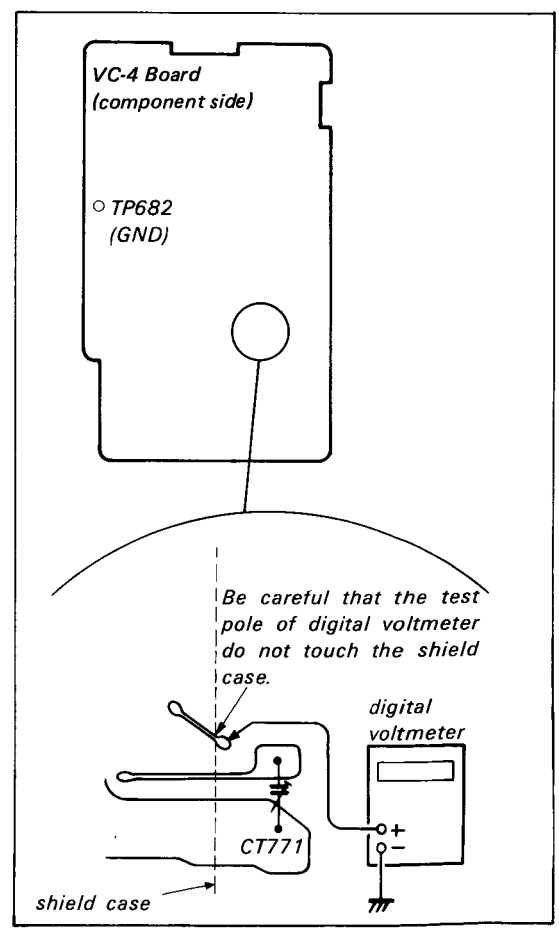

Fig.2

The information of cabinets have been contained on 2,3 page.

MICROFILM

VIDEO

The with mark and without mark have been added to the cabinets.

The following corrections should be made in the Service Manual (CCD-M8E: Part No. 9-972-429-03)

122 page

NOTE:

- Itmes with no part number and no description are not stocked because they are seldom required for routine service.
- The construction parts of an assembled part are indicated with a collation number in the remark column.
- Items marked "*" are not stocked since they are seldom required for routine service. Some delay should be anticipated when ordering these items.
- There are two types of cassette lid comportment, cabinet (L, R) and front cabinet, one marked inside and one not. When replacing check the marking and replace with the same type. If the wrong one is mounted, there will be small spaces between the above parts.
- The mechanical parts with no reference number in the exploded views are not supplied.

combination table

Description / mark	LID ASSY, CASSETTE COMPARTMENT	LID BLOCK ASSY	CABINET (RIGHT) BLOCK ASSY	CABINET BLOCK ASSY, FRONT	CABINET (LEFT) BLOCK ASSY
without mark	X-3695-454-5 (BLACK) X-3686-759-1 (SILVER) (AEP MODEL)	A-7080-118-B (BLACK) A-7080-123-A (SILVER) (AEP MODEL)	A-7080-134-B (BLACK) A-7080-143-A (SILVER) (AEP MODEL)	A-7080-067-E (BLACK) A-7080-125-A (SILVER) (AEP MODEL)	A-7080-133-A (BLACK) A-7080-140-A (SILVER) (AEP MODEL)
with mark	X-3695-408-5 (BLACK)	A-7080-119-B (BLACK)	A-7080-076-G (BLACK)	A-7080-053-E (BLACK)	A-7080-077-B (BLACK)

3-1. CABINET ASSEMBLY

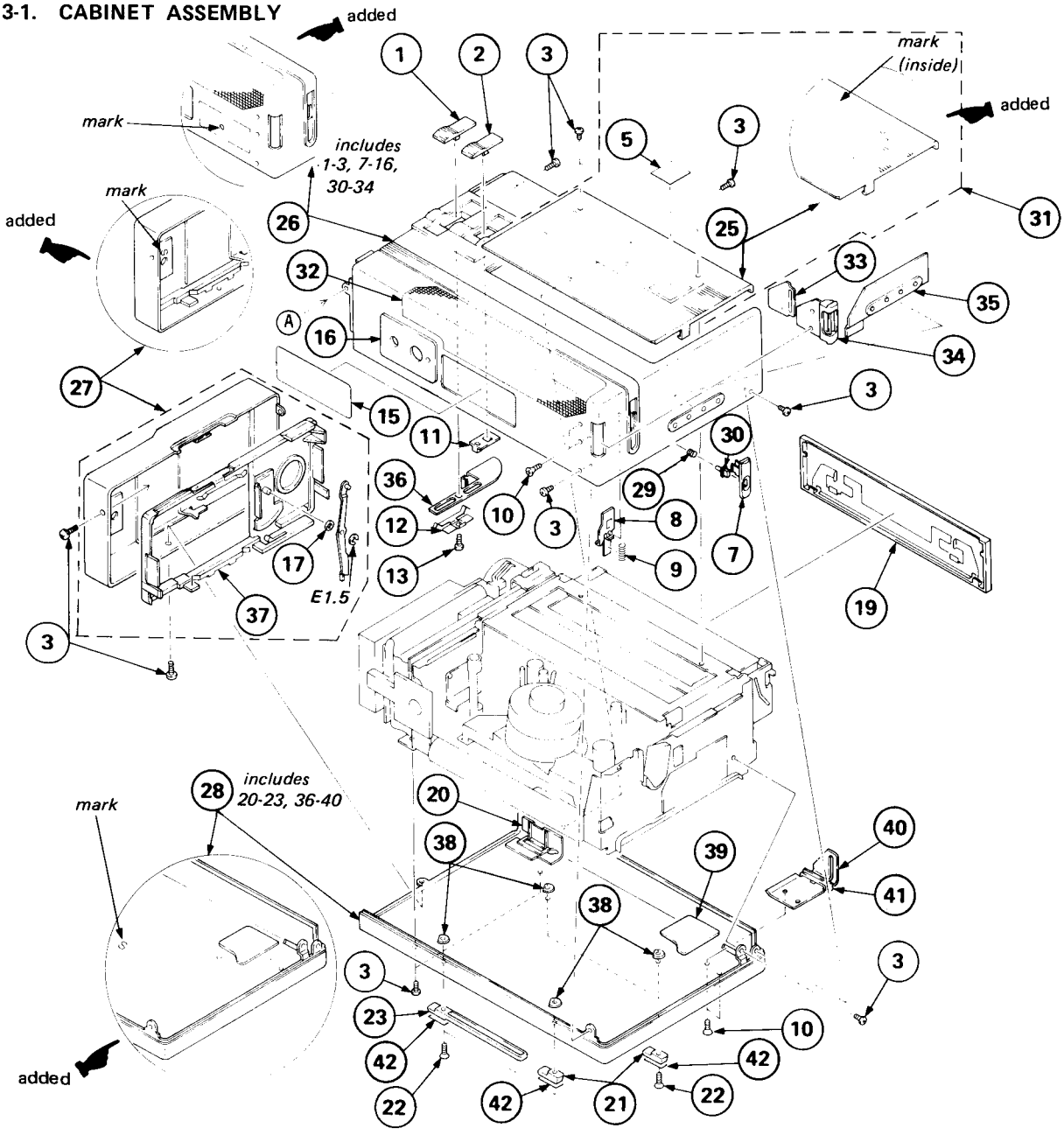

No.	Part No.	Description	Remark
1	3-695-427-01	KNOB, F (FOR BLACK MODEL)	
	3-695-427-21	KNOB, F (FOR SILVER MODEL)	
2	3-695-406-01	KNOB, WB (FOR BLACK MODEL)	
	3-695-406-21	KNOB, WB (FOR SILVER MODEL)	
3	3-695-653-01	SCREW (1.7x3), TAPPING (BLACK)	
	3-695-653-11	SCREW (1.7x3), TAPPING (SILVER)	
5	3-703-710-41	STICKER, SONY SYMBOL (12)	
7	3-695-404-01	KNOB, EJECT (WITHOUT LOCK MECHANISM)	
	3-699-537-01	KNOB, EJECT (WITH LOCK MECHANISM)	
8	3-695-405-01	JOINTER, EJECT (WITHOUT LOCK MECHANISM)	
	3-699-535-01	JOINTER, EJECT (WITH LOCK MECHANISM)	
9	3-695-482-02	SPRING, COMPRESSION (WITHOUT LOCK MECHANISM)	
	3-699-533-01	SPRING, COMPRESSION (WITH LOCK MECHANISM)	
10	3-695-667-01	SCRREW (2x3) (BLACK)	
	3-695-667-11	SCREW (2x3) (SILVER)	
11	3-695-407-01	JOINTER, WB	
12	3-695-441-01	SPRING	
13	4-908-792-51	SCREW (B2x5), TAPPING, P1	
15	*3-696-056-01	LABEL, MODEL NUMBER (AS, E, UK MODEL)	
	*3-696-057-01	LABEL, MODEL NUMBER (BLACK) (AEP MODEL)	
	*3-696-057-11	LABEL, MODEL NUMBER (SILVER) (AEP MODEL)	
16	3-695-409-01	PLATE, BOTTOM (BLACK)	
	3-695-409-11	PLATE, BOTTOM (SILVER)	
17	3-701-437-21	WASHER	
19	X-3686-760-1	LID ASSY, LS (SILVER)	
	X-3695-422-1	LID ASSY, LS (BLACK)	
20	3-695-662-01	PANEL, CN (BLACK)	
	3-695-662-21	PANEL, CN (SILVER)	
21	3-695-484-01	GUIDE (C), GRIP (BLACK)	
	3-695-484-11	GUID (C), GRIP (SILVER)	
22	3-695-668-01	SCREW (2x6) (BLACK)	
	3-695-668-11	SCREW (2x6) (SILVER)	
23	3-695-429-01	GUIDE (B), GRIP (BLACK)	
	3-695-429-11	GUIDE (B), GRIP (SILVER)	
25	X-3686-759-1	LID (T) ASSY (SILVER) (AEP MODEL) (WITHOUT MARK)	
	X-3695-408-5	LID ASSY, CASSETTE COMPARTMENT (BLACK) (WITH MARK)	
	X-3695-454-5	LID (T) ASSY (BLACK) (WITHOUT MARK)	
26	A-7080-076-G	CABINET (RIGHT) BLOCK ASSY (BLACK) (WITH MARK)	added
	A-7080-134-B	CABINET (RT) BLOCK ASSY (BLACK) (WITHOUT MARK)	
	A-7080-143-A	CABINET (RT) BLOCK ASSY (SILVER) (AEP MODEL) (WITHOUT MARK)	
27	A-7080-053-E	CABINET BLOCK ASSY, FRONT (BLACK) (WITH MARK)	
	A-7080-067-E	CABINET (T) BLOCK ASSY, FRONT (BLACK) (WITHOUT MARK)	added
	A-7080-125-A	CABINET (T) BLOCK ASSY, FRONT (SILVER) (AEP MODEL) (WITHOUT MARK)	
28	A-7080-077-B	CABINET (LEFT) BLOCK ASSY (BLACK) (WITH MARK)	
	A-7080-133-A	CABINET (LT) BLOCK ASSY (BLACK) (WITHOUT MARK)	added
	A-7080-140-A	CABINET (LT) BLOCK ASSY (SILVER) (AEP MODEL) (WITHOUT MARK)	
29	3-699-532-01	SPRING, COMPRESSION (WITH LOCK MECHANISM)	
30	3-699-534-01	KNOB, LOCK (WITH LOCK MECHANISM)	
31	A-7080-118-B	LID (T) BLOCK ASSY (BLACK) (WITHOUT MARK)	
	A-7080-119-B	LID BLOCK ASSY (BLACK) (WITH MARK)	corrected
	A-7080-123-A	LID (T) BLOCK ASSY (SILVER) (AEP MODEL) (WITHOUT MARK)	
32	3-695-408-01	LEATHER (MAIN)	
33	3-695-463-01	HOOK (A), BELT	
34	3-695-464-01	COVER (A), HOOK	
35	3-695-413-01	GUIDE (A), LED	
36	3-695-426-01	PLATE, JOINT, F	
37	*X-3695-410-3	CABINET ASSY, LENS (BLACK) (WITHOUT MARK)	
	*X-3686-761-1	CABINET ASSY, LENS (SILVER) (AEP MODEL) (WITHOUT MARK)	
38	3-695-481-01	NUT, PLATE	
39	*3-695-412-01	GUIDE (B), LED	
40	3-695-465-01	HOOK (B), BELT	
41	3-695-466-01	COVER (B), HOOK	
42	3-695-480-02	REINFONCEMENT, G GUIDE (BLACK) (WITHOUT MARK)	
	3-695-480-11	REINFONCEMENT, G GUIDE (SILVER) (AEP MODEL) (WITHOUT MARK)	

CCD-M8E

SONY
SERVICE MANUAL

AEP Model
Australian Model
E Model
UK Model

December, 1986

CORRECTION-2

Please correct your service manual (ADJUSTMENT).

☛ : corrected portion

Page	Correct	Incorrect
17	**1-9. AGC SETTING ADJUSTMENT** **Equipment required:** Oscilloscope ☛ VC-4 Board TP685	**1-9. AGC SETTING ADJUSTMENT** **Equipment required:** Oscilloscope VC-5 Board TP810
20	**1-21. APERTURE ADJUSTMENT** **Equipment required:** Oscilloscope ☛ VC-6 Board TP952	**1-21. APERTURE ADJUSTMENT** **Equipment required:** Oscilloscope ME-1 Board TP711
22	**1-26. BURST PHASE ADJUSTMENT** Adjust RV884 of ED-11 ☛ board so that the center voltage becomes 2.722V DC (see Fig. 1-34). ☛ 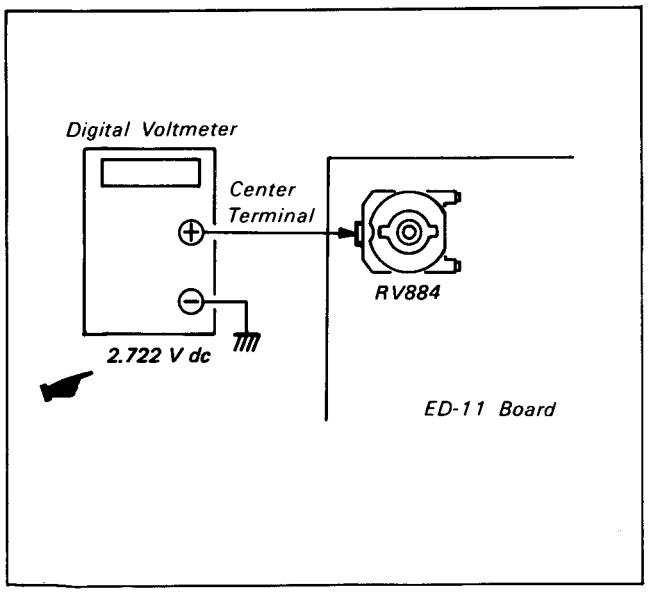 *Fig. 1-34*	**1-26. BURST PHASE ADJUSTMENT** Adjust RV884 of VC-6 board so that the center voltage becomes 2.722 V. 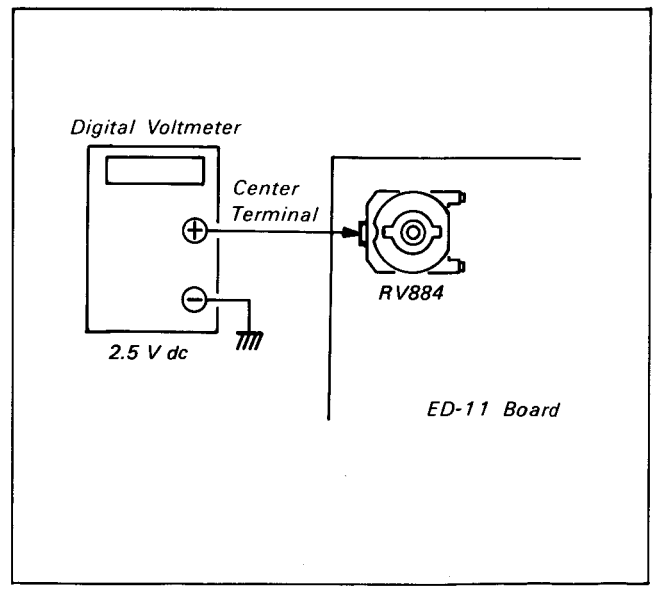 *Fig. 1-34*

– Continued on next page –

MICROFILM
9-972-429-92
Sony Corporation
English
86L0969-1
Printed in Japan
© 1986

VIDEO

Page	Correct	Incorrect
	1-27. COLOR REPRODUCIBILITY ADJUSTMENT	**1-27. COLOR REPRODUCIBILITY ADJUSTMENT**
	Equipment required: Digital Voltmeter Oscilloscope	**Equipment required:** Digital Voltmeter Oscilloscope
added	**Object:** Color Bar Chart (in Standard Pattern Frame)	**Object:** Color Bar Chart (in Standard Pattern Frame)
	Setting: Set SW801 (WHITE BAL) at indoors position.	**Adjusting Procedure:**
	Adjusting Procedure:	1) By turning RV884 on ED-11 Board, adjust the ce terminal level at 2.5V DC (see Fig. 1-34).
	1) Connect an oscilloscope to TP951 on VC-6 Board, and by turning RV882 on ED-11 Board, adjust the red chrominance level at 400±20 mVp-p (see Fig. 1-35).	
added	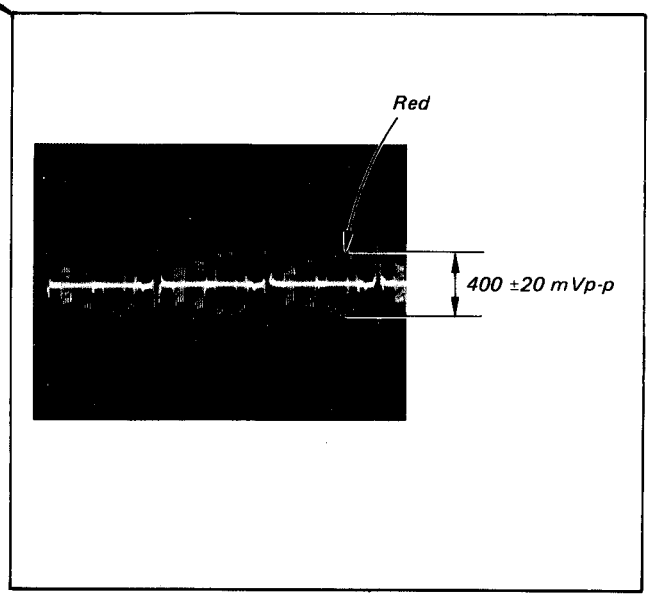	
	Fig. 1-35	
22	2) Connect the oscilloscope CH-1 and CH-2 to TP808 and TP807, respectively, on VC-5 Board, and engage an X-Y mode of both CH-1 and CH-2 at 50 mV/div.	2) Connect the oscilloscope CH-1 and CH-2 to TP808 TP807, respectively, on VC-5 Board, and engage an mode of both CH-1 and CH-2 at 50 mV/div.
	3) Turn RV801 (R-Y MIX) and RV882 (C GAIN) so that RED enters the center of the color reproduction frame.	3) Turn RV801 (R-Y MIX) and RV882 (C GAIN) so t RED enters the center of the color reproduction fra
	4) Turn RV802 (B-Y MIX) RV827 (B-Y GAIN) so that the brightness point of YL enters the center of the color reproduction frame.	4) Turn RV802 (B-Y MIX) RV882 (C GAIN) so that brightness point of YL enters the center of the cc reproduction frame.
	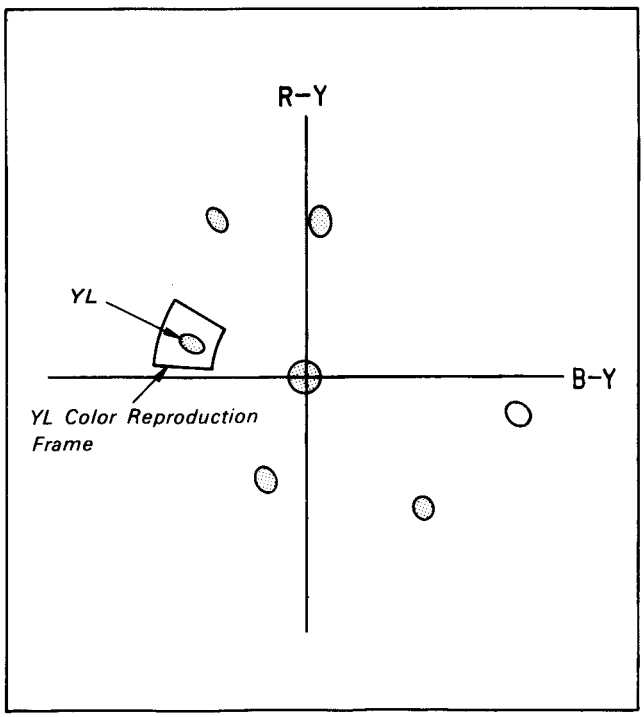	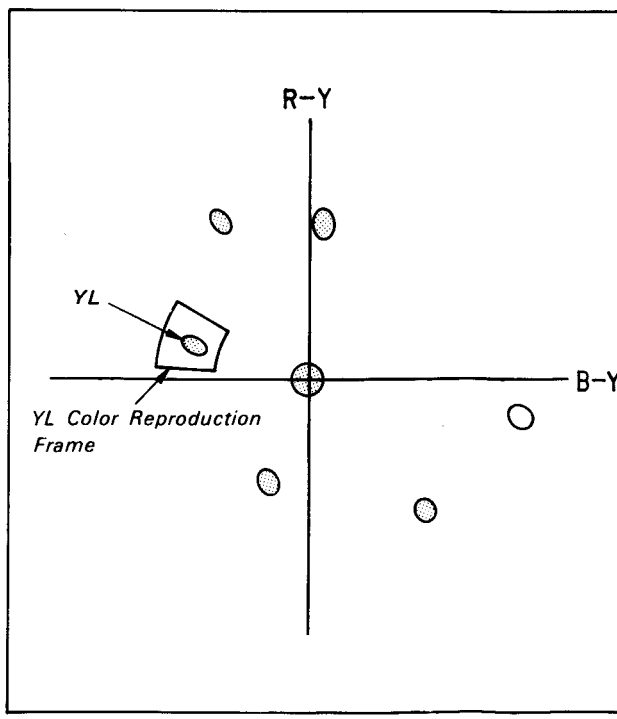
	Fig. 1-36	*Fig. 1-35*